IoT-Based Fishermen Tracking and Boundary Protection with Integrated Emergency Messaging

A project submitted to the Bharathidasan University
in partial fulfillment of the requirements
for the award of the Degree of

BACHELOR OF COMPUTER APPLICATIONS

Submitted by

KARTHICK S

Register Number: 235113533

Under the guidance of

Dr. R.PREETHI, M.Sc., M.Phil., Ph.D.,
Assistant Professor

DEPARTMENT OF COMPUTER APPLICATIONS

BISHOP HEBER COLLEGE (AUTONOMOUS)

"Nationally Reaccredited at A++ Grade with a CGPA of 3.69 out of 4 in NAAC IV Cycle"

Recognized by UGC as "College of Excellence"
Affiliated to Bharathidasan University

TIRUCHIRAPPALLI-620 017

OCTOBER – 2025

DECLARATION

hereby declare that the project work presented is originally done by me under ıe guidance of **Dr.R.PREETHI, M.Sc., M.Phil., Ph.D., Assistant Professor, 'G Department of Computer Applications, Bishop Heber College ıutonomous), Tiruchirappalli-620 017** and has not been included in any her thesis/project submitted for any other degree.

Name of the Candidates : **KARTHICK S**

Register Number : **235113533**

Batch : **2023-2026**

Karthick.S

Signature of the Candidate

Dr. R.PREETHI , M.Sc., M.Phil., Ph.D.,

Assistant Professor,

UG Department of Computer Applications,

Bishop Heber College (Autonomous),

Tiruchirappalli – 620017

Date: 16/10/2025

CERTIFICATE

This is to certify that the project work entitled **"IoT-Based Fishermen Tracking and Boundary Protection with Integrated Emergency Messaging"** is a bonafide record work done **KARTHICK S , Register Number: 235113533,** in partial fulfillment of the requirements for the award of the degree of **BACHELOR OF COMPUTER APPLICATIONS** during the period 2023 - 2026.

13/10/2025

Place: Trichy

Signature of the Guide

UG DEPARTMENT OF COMPUTER APPLICATIONS
BISHOP HEBER COLLEGE (AUTONOMOUS),
"Nationally Reaccredited at A'' Grade with a CGPA of 3.69 out of 4 in NAAC IV Cycle"
(Recognized by UGC as "College of Excellence")
(Affiliated to Bharathidasan University)
TIRUCHIRAPPALLI – 620 017

Date: 16/10/2025

Course Title: Project **Course Code: U23CA5PJ**

CERTIFICATE

The Viva-Voce examination for the candidate **KARTHICK S (235113533)** was held on 16/10/2025

13/10/2025
Signature of the Guide

Signature of the HOD

Examiners:

1. 16/10/25

2. 16/10/25

ACKNOWLEDGEMENT

I would like to thank almighty for blessing me with strength and health. Inspiration and motivation has always played a key role in success of my venture.

I wish to express my sincere thanks to **Dr. PRINCY MERLIN M.Sc., M.Phil., Ph.D., Principal, Bishop Heber College, Tiruchirappalli**. who gave me the opportunity to do the course in this college.

I show my deep sense of gratitude to **Dr. J.JAMES MANOHARAN, MCA., M.Phil., Ph.D., PGDCA., Associate Professor and Head, UG Department of Computer Applications, Bishop Heber College, Tiruchirappalli.** Who encourage me and provided me the opportunity to prepare the project.

I am grateful to thank my guide **Dr. R. PREETHI, M.Sc., M.Phil., Ph.D., Assistant Professor, UG Department of Computer Application** who encouraged, motivated, corrected at every step, whose valuable guidance and supervision has helped me throughout the project which has shaped my project work as it shows.

I also thank technical staffs for their valuable guidance and support throughout the project, I am also immensely obliged to my friends for their elevating inspirational, support and encouragement in completion of this project.

Last but not the least, my parents, the one who aspires me to be focused, and dedicated in the work I do, and for being my moral support, so with due regards I express my gratitude to them.

KARTHICK S

Table of Contents

S.No	Title	Page.No.
1.	Abstract	1
2.	Introduction	2
3.	Existing and Proposed System	6
4.	Software and Hardware Requirements	9
5.	Review of Literature	40
6.	Definition of the Problem and Scope of the Research work	46
7.	Architectural Design	49
8.	Results and Discussions	54
9.	Conclusion & Future Enhancement	56
10.	References	59
11.	Paper Publication	62
12.	Appendix	73

1. ABSTRACT

Fishing remains a primary livelihood for many coastal communities, but fishermen often encounter serious challenges when venturing into the sea, especially the risk of unintentionally crossing international maritime boundaries. Such incidents may lead to legal issues, loss of equipment, or even danger to life. To overcome this problem, the proposed system introduces an intelligent fisherman tracking and safety solution that ensures both boundary protection and reliable communication. The system works by continuously monitoring the position of the fishing boat. When the boat approaches within one kilometer of the maritime border, an early warning alert is triggered to notify the fishermen about their proximity to the restricted zone. If the boat continues further and reaches within 500 meters of the border, the engine is automatically stopped, thereby preventing accidental trespassing into international waters. Beyond boundary protection, the system also integrates a communication feature that allows fishermen to send short request messages to land-based people in case of emergencies, such as food, fuel, or medical needs. This combination of real-time monitoring, preventive control, and support communication ensures improved safety, reduces boundary violations, and strengthens the confidence of fishermen while carrying out their activities in the sea.

INTRODUCTION

2. INTRODUCTION

Fishing has always been one of the oldest and most important occupations for human society, especially for people living near coastal areas. For many families, it is not just a job but the only source of livelihood that provides food, income, and survival. Fishermen often spend long hours, and sometimes even days, in the sea searching for their catch. While fishing plays such a vital role in the economy and daily life, it is also filled with risks and uncertainties. One of the biggest challenges that fishermen face is the lack of proper communication once they move away from the shore. Unlike people on land who can easily connect with each other, fishermen often lose contact when they are deep at sea. This lack of communication creates serious problems, especially when emergencies arise.

Fig 1.1 Fishing

The sea is an unpredictable environment. Sudden storms, strong winds, and rough waves can appear without much warning. When such situations occur, fishermen may not have the means to alert their families or authorities for help. Many unfortunate incidents have been reported where boats capsized or fishermen went missing simply because there was no proper way to send or receive messages in time. This not only puts the lives of fishermen in danger but also leaves their families in constant worry about their safety. If a fisherman does not return on time, families are left waiting without knowing whether he is

safe, lost, or in need of urgent help. A simple and reliable communication system can reduce such fears and save many lives.

Another major problem fishermen face is unknowingly crossing into restricted or foreign waters. In the middle of the sea, there are no clear marks or visible borders, and it becomes difficult for fishermen to know when they are nearing another country's area. This often results in accidental crossings, which can lead to arrests, heavy fines, or even the seizure of their boats. Many fishermen who unintentionally cross such boundaries are treated as offenders, even though their only intention was to continue fishing. A proper communication system can warn them in advance and guide them to stay within safe and legal waters.

Apart from safety concerns, communication also plays an important role in improving the efficiency of fishing activities. If fishermen are able to stay in touch with coastal stations or other boats, they can share useful information such as safe fishing zones, weather conditions, or emergency needs. In case a boat breaks down or runs out of fuel in the middle of the sea, quick communication with the shore or nearby boats can ensure timely assistance. Without such support, small technical failures can turn into life-threatening situations. Thus, an effective communication system not only improves safety but also builds a sense of cooperation and community among fishermen.

Furthermore, communication systems can support better management of resources. When fishermen are connected, information can be shared about which areas have already been heavily fished and which areas should be avoided to allow fish to multiply again. This helps in protecting marine resources and promoting sustainable fishing practices. It also allows local authorities to keep track of fishing activities and provide necessary support during peak seasons. For the fishermen, being connected means less time

wasted in uncertain areas and more time focused on productive work, which increases their income and stability.

The mental well-being of fishermen and their families is another important aspect linked with communication. Long fishing trips often separate fishermen from their families, sometimes for days or weeks. Families on land remain anxious about the safety of their loved ones, especially when the sea is rough or when fishermen do not return as expected. A simple message or alert system can bridge this emotional gap, giving confidence to families that their loved ones are safe and in touch. For fishermen too, knowing that they can call for help or inform their families brings a sense of relief and confidence while working in the middle of the sea.

In fishermen face many challenges in their daily lives, and one of the most serious among them is the absence of reliable communication while at sea. Without proper communication, they remain vulnerable to accidents, bad weather, mechanical problems, and unintentional boundary crossings. Their families are left in constant worry, and authorities find it difficult to provide timely support. Therefore, there is a strong need for a dedicated fishermen communication system that ensures safety, reduces risks, and improves the overall well-being of fishing communities. Such a system would not only protect lives but also strengthen the fishing industry, which remains a backbone of coastal societies. By enabling fishermen to stay connected, informed, and supported, we take a step forward in making fishing a safer and more sustainable livelihood for future generations.

EXISTING SYSTEM AND PROPOSED SYSTEM

3. EXISTING SYSTEM AND PROPOSED SYSTEM

3.1 EXISTING SYSTEM

The fisherman tracking is still dependent on traditional practices where fishermen follow fixed sailing routes and rely on harbor authorities to note their departure and return timings. Information about fishing trips is often recorded manually in registers, which makes it difficult to update or verify in real time. In most cases, families and local communities act as the main source of communication if any delay or abnormal situation occurs. The monitoring of fishing activities is mostly based on trust and word of mouth rather than accurate tracking technologies. Fishermen usually depend on their experience and community guidance to ensure safe navigation and timely return. While this method has been practiced for years, it does not provide instant updates or automatic alerts during risky situations. Local authorities sometimes cross-check fishing permits and licenses, but this process is slow and disconnected from daily operations. The absence of advanced monitoring leads to uncertainty when fishermen face unexpected challenges in deep waters. Emergencies such as natural calamities or sudden health issues cannot be reported quickly through these conventional systems. This creates significant safety concerns and delays in providing necessary assistance to the fishermen. Overall, the system lacks reliability, speed, and efficiency to safeguard the lives of fishermen at sea.

3.1.1 DISADVANTAGES

- Limited coverage in deep-sea areas.
- High setup and maintenance cost.
- Delayed response in emergencies.
- Alerts may fail due to signal issues.
- System not user-friendly for all fishermen.

3.2 PROPOSED SYSTEM

The proposed fisherman tracking system is designed to ensure the safety and security of fishermen while preventing accidental boundary crossing during sea travel. The system makes use of continuous monitoring of the fishing boat's movement in real time and automatically compares its position with predefined maritime borders. Whenever the boat is about to reach the restricted boundary, the system activates a warning alert one kilometer before the border, thereby providing sufficient time for fishermen to take corrective action. If the boat continues its movement and reaches within 500 meters of the international boundary, the system takes preventive action by automatically stopping the engine, ensuring that no further progress into foreign waters is possible. In addition to border control, the system is also equipped with a simple communication feature that allows fishermen to send short request messages to people on land whenever they require urgent help, food, fuel, or other assistance during the journey. This ensures that they are not left helpless in emergency situations. The overall design of the system emphasizes safety, reliability, and usability, making it an essential solution for protecting fishermen's lives, reducing accidental violations, and providing effective assistance during sea operations.

3.2.1 ADVANTAGES

- Ensures safety by preventing boundary crossing
- Provides early alerts to fishermen timely
- Reduces risks of international violations
- Supports communication in emergency situations
- Enhances reliability of fishing operations

HARDWARE REQUIREMENT AND

SOFTWARE REQUIREMENT

4. HARDWARE REQUIREMENT AND SOFTWARE REQUIREMENT

4.1 Hardware Requirement

- Power supply
- Arduino Nano
- LCD
- GSM
- GPS
- Buzzer
- Key
- Driver
- Motor

4.2 Software Requirement

- Arduino IDE

4.3 Hardware description

GSM (Global System for Mobile Communications)

GSM (Global System for Mobile Communications) is a widely adopted standard for mobile communications, enabling cellular networks to provide services such as voice calls, text messages, and data transmission. Developed in the 1980s and initially deployed in Europe, GSM has become the global standard for mobile phone systems, offering a reliable, scalable, and secure communication platform. The GSM network operates on two main components: the mobile station (MS), which includes the user’s mobile device, and the base station subsystem (BSS), which connects the mobile device to the network.

Fig GSM

The GSM system relies on a digital transmission method, using Time Division Multiple Access (TDMA) to allocate time slots for multiple users within the same frequency channel. This method allows for efficient use of available spectrum and supports high capacity in mobile communication systems. GSM also incorporates encryption protocols to ensure the confidentiality and integrity of communication, making it a secure platform for voice and data exchanges.

A key feature of GSM is the SIM (Subscriber Identity Module) card, which holds user-specific data such as phone numbers, contacts, and security information. This card makes it easy for users to switch between devices without losing personal information. Additionally, GSM supports services such as SMS (Short Message Service), enabling text communication between mobile devices, and GPRS (General Packet Radio Service) for basic data services, providing internet access and multimedia messaging capabilities.

Despite the rise of newer communication technologies such as 4G and 5G, GSM remains widely used in many parts of the world, especially in rural or developing areas where the infrastructure for more advanced systems may not be readily available. It continues to serve as a reliable communication system for voice, text, and basic data services.

GPS (Global Positioning System)

GPS (Global Positioning System) is a satellite-based navigation system that provides precise location and time information anywhere on Earth, regardless of weather conditions. Developed by the United States Department of Defense and launched in the 1970s, GPS has become an indispensable tool for navigation, mapping, and location-based services across a wide range of industries, including transportation, telecommunications, agriculture, and emergency response.

Fig GPS

GPS operates through a constellation of at least 24 satellites that orbit the Earth. These satellites transmit signals that are received by GPS receivers, which use the time difference between the signals from multiple satellites to calculate the receiver's precise location on Earth, often with an accuracy of a few meters. The system is based on a principle called trilateration, which involves measuring distances from at least three satellites to determine the receiver’s position. The more satellites a GPS receiver can access, the more accurate the location calculation becomes.

GPS provides not only positioning information but also time synchronization, which is crucial for various applications like telecommunications, power grids, and financial transactions. The system is highly reliable and operates continuously, providing 24/7 service anywhere in

the world. GPS technology has revolutionized navigation, enabling users to obtain real-time directions, track movements, and improve logistics operations. It is also widely used in applications such as geocaching, surveying, and mapping.

Beyond personal navigation, GPS plays a critical role in safety and emergency response. It enables first responders to pinpoint the location of accidents or emergencies, facilitating faster response times. Additionally, GPS-enabled devices such as smartphones, vehicles, and wearables offer tracking and monitoring features, providing security and peace of mind. With ongoing advancements in GPS technology, such as improved accuracy and the integration of additional systems like Galileo and GLONASS, the global positioning system continues to evolve and support an increasing number of applications worldwide.

Key

The emergency key is an essential safety and backup mechanism that ensures immediate access and reliability during unexpected situations. In today's world, where most systems are controlled by advanced electronics, automation, and digital technologies, the importance of an emergency key has significantly increased. It acts as a manual alternative or backup solution that can be used when the primary system fails due to technical errors, battery drain, power outages, or damage. Emergency keys are designed to provide users with a sense of security and assurance that they will not be left helpless in critical times. For example, in modern automobiles equipped with smart key systems, an emergency key is embedded within the remote device, allowing the user to unlock the car manually when the electronic function is disabled. Similarly, in smart homes, digital locks often come with a hidden emergency key option that enables residents to access their property in case of system malfunction or

power failure. Apart from household and automobile use, emergency keys also play a vital role in industrial, healthcare, and safety domains. In hospitals, emergency backup keys may include manual equipment and switches that help staff operate life-saving devices even during sudden power loss or system crashes. In the security industry, emergency keys are provided to access lockers, safes, and restricted areas when electronic authentication systems fail. Their significance lies in their ability to minimize downtime, avoid panic, and ensure continuity of critical operations. Moreover, emergency keys are usually designed with strong, durable materials to withstand long-term use, ensuring they can perform effectively when needed most. They are lightweight, easy to carry, and often hidden in specialized compartments for safety. The common advantage of having an emergency key is the peace of mind it provides, as it guarantees a backup plan is always available during urgent conditions. As technology continues to advance, the role of emergency keys will remain relevant because no system is fully immune to errors, failures, or accidents. Therefore, the emergency key can be considered a small but powerful safeguard that bridges the gap between convenience and security, making it a necessary component in modern life.

LCD (liquid crystal display)

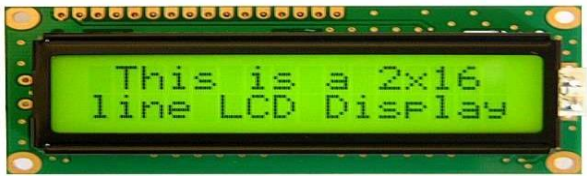

Fig LCD Display

LCD Display

LCD (Liquid Crystal Display) screen is an electronic display module and find a wide range of applications. A 16x2 LCD display is very basic module and is very commonly used in various devices and circuits.

A 16x2 LCD means it can display 16 characters per line and there are 2 such lines. In this LCD each character is displayed in 5x7 pixel matrix. This LCD has two registers, namely, Command and Data. The command register stores the command instructions given to the LCD, The data register stores the data to be displayed on the LCD

The data is the ASCII value of the character to be displayed on the LCD.Liquid crystal displays are used for display of numeric and alphanumeric character in dot matrix and segmental displays. The two liquid crystal materials which are commonly used in display technology are nematic and cholesteric whose schematic arrangement of molecules is shown in fig. The most popular liquid crystal structure is the Nematic Liquid Crystal (NLC). In this all the molecules align themselves approximately parallel to a unique axis (director), while retaining the complete translational freedom. The liquid is normally transparent, but if subjected to a strong electric field, disruption of the well ordered crystal structure takes place causing the liquid to polarize and turn opaque. The removal of the applied electric field allows the crystal structure to regain its original form and the materials become transparent.

Based on the construction, LCD’s are classified into two types. They are,

(i) Dynamic scattering type

(ii) Field effect type.

Dynamic scattering type

The construction of the dynamic scattering liquid crystal cell is shown in the fig. The display consists of two glass plates, each coated with tin oxide (SnO2) on the inside with transparent electrodes separated by a liquid crystal layer,5μA to 50 μA thick. The oxide coating on the front sheet is etched to produce a single or multi- segment pattern of characters, with each segment properly insulated from each other. A weak electric field applied to liquid crystal tends to align molecule in the direction of the field. As soon as the voltage exceeds certain threshold value, the domain structure collapses and the appearance is changed. As the voltage grows further, the flow becomes turbulent and the substance turns optically homogenous. In this disordered state, the liquid crystal scatters light.

Thus, when the liquid is not activated, it is transparent. When the liquid is activated, the molecular turbulence causes light to be scattered in all directions and the cell appears bright. This phenomenon is called dynamic scattering

Field effect type

The construction of the field effect LCD display is similar to that of the dynamic scattering type, with the expectation that two thin polarizing optical filters are placed at the inside of each glass sheet.

The LCD material is of twisted nematic type which twists the light (change in direction of polarization) passing through the cell when the latter is not energized. This allows light to pass through the optical filters and the cell appears bright. When the cell is energized, no twisting of light takes place and the cell appears dull.

Liquid crystal cells are of two types (i) transitive type (ii) reflective type. In the transitive type cell both glass sheets are transparent so that the light from the rear source is scattered in the forward direction when the cell is activated. The reflecting type cell has a reflecting surface on one side of the glass sheet. The incident light on the front surface of the cell is dynamically scattered by an activated cell. Both types of cells appear quite bright when activated even under ambient light conditions.

Liquid crystals consume small amount of energy, in a seven segment display the current drawn is about 25 μA for dynamic scattering cells and 300 μA .

for field effect cells LCD's require ac voltage supply. A typical voltage supply to dynamic scattering LCD's are normally used for seven-segmental displays.

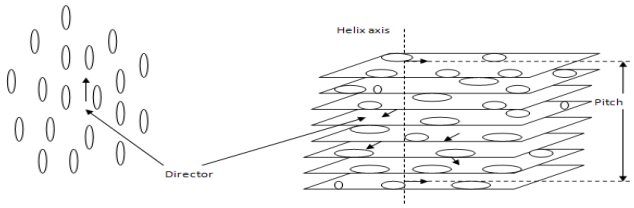

Fig Schematic arrangement in liquid crystal

ARDUINO NANO

One kind of microcontroller board is the Arduino Nano, which is created by Arduino.cc. An Atmega328 microcontroller can be used to construct it. The Arduino UNO also makes use of this microcontroller. This versatile board comes in a compact size and offers an extensive range of uses. The Arduino Mega, Arduino Pro Mini, Arduino UNO, Arduino YUN, Arduino Lilypad, Arduino Leonardo, and Arduino Due are the principal other Arduino boards. AVR Development Board, PIC Development Board, Raspberry Pi, Intel Edison, MSP430 Launchpad, and ESP32 board are some additional development boards. This board is similar to an Arduino Duemilanove board in that it offers

a lot of features. The packaging for this Nano board is distinct, though.It lacks a DC jack, which allows the power supply to be supplied via a tiny USB port instead of being directly attached to pins like VCC and GND. A small USB connector on the board allows you to supply 6 to 20 volts to this board

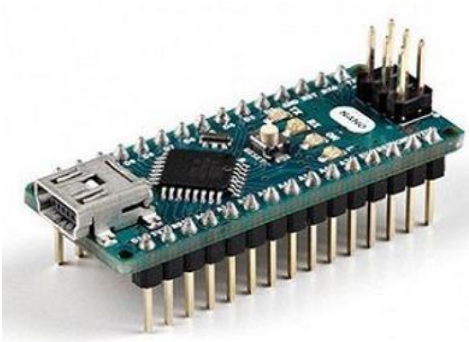

Fig Arduino Nano

- **Started With The Arduino Nano**

The Arduino Nano is a small, complete, and breadboard-friendly board based on the ATmega328P. It offers the same connectivity and specs of the UNO board in a smaller form factor.

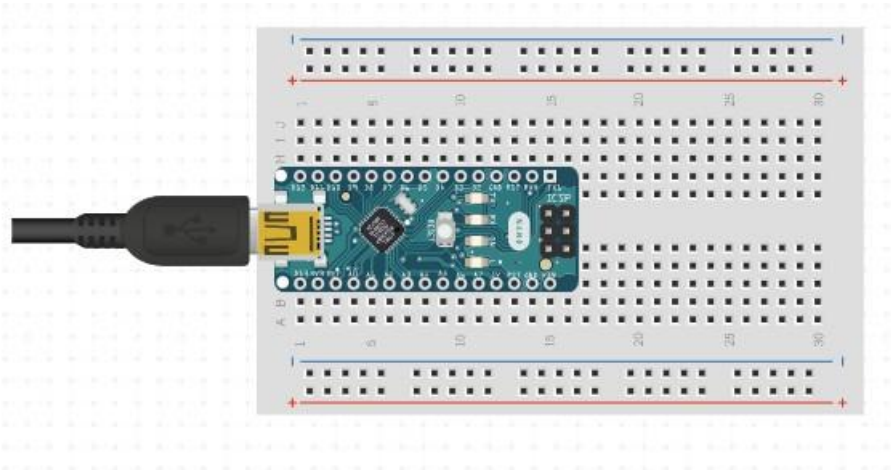

Fig Arduino NANO Interface

The Arduino Nano is programmed using the Arduino Software (IDE), our Integrated Development Environment common to all our boards and running

both online and offline. For more information on how to get started with the Arduino Software visit the Getting Started page.

Arduino Nano on the Arduino Desktop IDE

If you want to program your Arduino Nano while offline you need to install the Arduino Desktop IDE To connect the Arduino Nano to your computer, you'll need a Mini-B USB cable. This also provides power to the board, as indicated by the blue LED (which is on the bottom of the Arduino Nano 2.x and the top of the Arduino Nano 3.0).

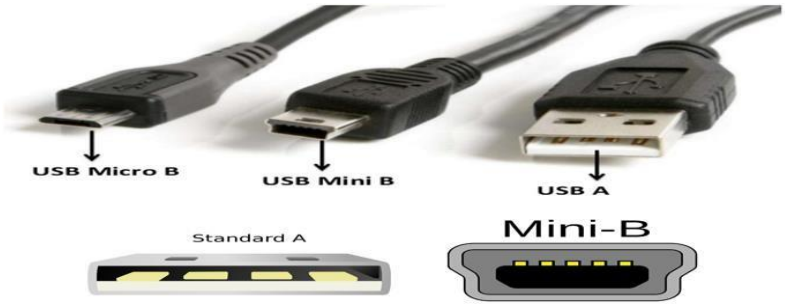

Fig NANO Interfacing USB Types of Port

Open your first sketch

- Open the LED blink example sketch: File > Examples > 01.Basics > Blink.

Select your board type and port

- Select Tools > Board > Arduino AVR Boards > Arduino Nano.

NOTE: We have updated the Nano board with a fresh bootloader. Boards sold by us from January 2018 have this new bootloader, while boards manufactured before that date have the old bootloader. First, check that **Tools > Board > Boards Manager shows you have the Arduino AVR Boards** 1.16.21 or later installed. Then, to program the NEW Arduino NANO boards you need to choose **Tools > Processor > ATmega328P**. To program old boards you need to choose **Tools > Processor > ATmega328P (Old Bootloader)**. If you get an

error while uploading or you are not sure which bootloader you have, try each Tools > Processor menu option until your board gets properly programmed.

Driver

A driver in electronics refers to a circuit or module designed to interface low-power control signals with high-power devices such as motors, LEDs, or relays. Microcontrollers and processors generally operate with limited current outputs, insufficient to drive mechanical or high-current loads directly. The driver acts as an intermediary, receiving low-level signals and amplifying them to levels suitable for controlling actuators or external hardware. Motor drivers, transistor-based circuits, and dedicated driver ICs are common examples, enabling safe and efficient operation of components that demand more power than microcontrollers can supply. Drivers often incorporate protection features to prevent issues such as overcurrent, overheating, or back electromotive force (back-EMF).

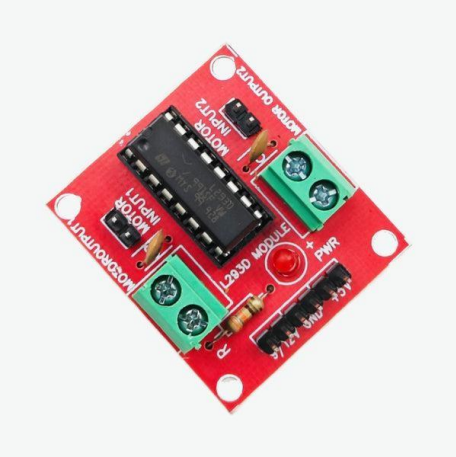

Figure 4.3 Driver

Motor driver ICs, such as the L293D or L298N, are widely used to control DC motors and stepper motors, allowing forward and reverse operations, speed variation, and braking. LED drivers, on the other hand,

ensure consistent brightness and protect LEDs from current fluctuations. Relay drivers allow microcontrollers to switch high-voltage appliances, extending the range of applications for automation. Without drivers, directly connecting high-load devices to microcontrollers could damage the system due to excessive current draw or voltage spikes. Thus, the driver acts as both an amplifier and a protective barrier between control circuits and power devices.

Drivers play a crucial role in ensuring system efficiency, safety, and scalability. In robotics, they allow microcontrollers to control multiple motors with precision, while in industrial systems they enable automation of heavy machinery. Drivers are also essential in communication systems, amplifying weak signals to levels suitable for transmission. Their modularity and adaptability have made them a standard building block in embedded and electronic systems. With technological advancements, modern drivers now feature compact designs, improved efficiency, and advanced features like pulse-width modulation (PWM) support, fault detection, and thermal regulation. These enhancements make drivers indispensable in bridging the gap between control logic and physical operation in modern electronics.

Motor

A motor is an electromechanical device that converts electrical energy into mechanical energy, enabling motion in machines and systems. The fundamental principle of motor operation is based on electromagnetic induction, where current passing through a coil in a magnetic field generates force, resulting in rotation. Motors come in various types such as DC motors, stepper motors, and servo motors, each designed for specific functions. DC motors are commonly used for continuous rotation in applications like fans, pumps, and toys, while stepper motors provide precise angular control and

are suitable for CNC machines, 3D printers, and robotics. Servo motors combine precision with feedback control, making them ideal for applications requiring accurate position adjustments, such as camera gimbals or robotic arms. Regardless of the type, motors are vital components across industries, powering systems ranging from household appliances to industrial machinery and electric vehicles.

Figure 4.4 Motor

One of the advantages of motors is their versatility and scalability. Small motors can be used in consumer electronics such as smartphones for vibration feedback, while large industrial motors drive heavy machinery in manufacturing plants. DC motors, in particular, are valued for their simple control through voltage variation, enabling easy speed adjustment. In contrast, stepper motors excel in applications where precise positioning is required without the need for additional sensors. Servo motors go one step further by integrating control circuits and feedback mechanisms, ensuring accuracy and stability under variable loads. Modern advancements in brushless DC motors (BLDC) have introduced high efficiency, reduced noise, and long operational lifespans, making them widely adopted in drones, electric vehicles, and automation equipment. This adaptability across

scales demonstrates why motors remain indispensable in mechanical systems.

The integration of motors with electronics has created innovative solutions in automation, robotics, and transportation. Microcontrollers, motor drivers, and sensors enable fine-grained control of motor speed, torque, and direction. Pulse-width modulation (PWM) signals are commonly used to control speed and power delivery efficiently. In smart applications, motors are often coupled with feedback systems like encoders, ensuring precise control and monitoring of motion. Energy-efficient motor designs are increasingly emphasized to reduce power consumption and environmental impact, particularly in large-scale industries. Furthermore, with the growing adoption of renewable energy and electric mobility, motors continue to evolve with better materials, compact designs, and advanced control algorithms. Their combination of mechanical power and electronic intelligence ensures their relevance in the development of next-generation technologies.

Buzzer

A buzzer is a small, simple, and widely-used audio signalling device that produces a distinctive buzzing or beeping sound when an electrical current passes through it. It consists of a coil of wire and a diaphragm or vibrating element. When an electric voltage is applied to the buzzer, it causes the coil to generate a magnetic field, which, in turn, attracts the diaphragm or moves it rapidly back and forth. This motion of the diaphragm creates vibrations in the surrounding air, producing the audible sound that we associate with buzzers. Buzzers are commonly employed in various applications, such as alarms, timers, doorbells, and electronic games, to alert users to specific events or

conditions due to their simplicity, reliability, and ability to provide immediate auditory feedback.

Fig Buzzer

Power Supplies

A power supply (sometimes known as a power supply unit or PSU) is a device or system that supplies electrical or other types of energy to an output load or group of loads. The term is most commonly applied to electrical energy supplies, less often to mechanical ones, and rarely to others.

This circuit is a small +5V power supply, which is useful when experimenting with digital electronics. Small inexpensive wall transformers with variable output voltage are available from any electronics shop and supermarket. Those transformers are easily available, but usually their voltage regulation is very poor, which makes then not very usable for digital circuit experimenter unless a better regulation can be achieved in some way. The following circuit is the answer to the problem.

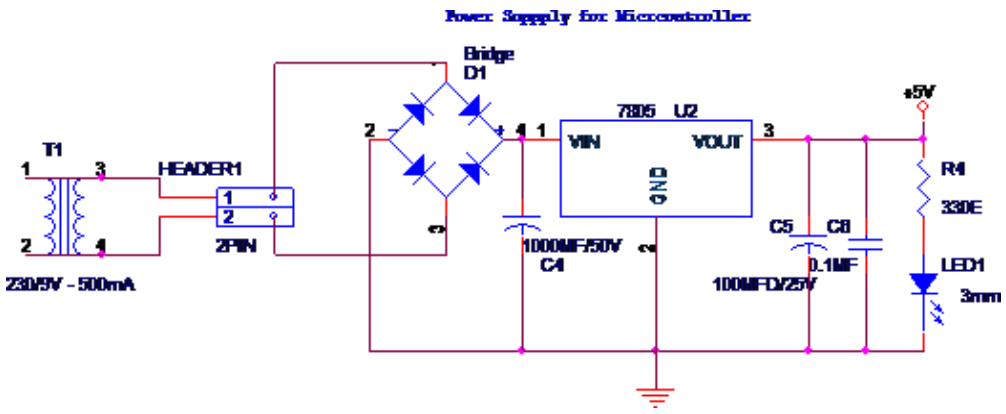

Fig Block diagram of power supply

Transformer

A transformer is a device that transfers electrical energy from one circuit to another through inductively coupled wires. A changing current in the first circuit (the primary) creates a changing magnetic field; in turn, this magnetic field induces a changing voltage in the second circuit (the secondary). By adding a load to the secondary circuit, one can make current flow in the transformer, thus transferring energy from one circuit to the other. The secondary induced voltage V_S is scaled from the primary V_P by a factor ideally equal to the ratio of the number of turns of wire in their respective windings:

$$\frac{V_S}{V_P} = \frac{N_S}{N_P}$$

By appropriate selection of the numbers of turns, a transformer thus allows an alternating voltage to be stepped up — by making N_S more than N_P or stepped down, by making it less.

A key application of transformers is to reduce the current before transmitting electrical energy over long distances through wires. Most wires have resistance and so dissipate electrical energy at a rate proportional to the square of the current through the wire. By transforming electrical power to a high-voltage, and therefore low-current form for transmission and back again afterwards, transformers enable the economic transmission of power over long distances.

Consequently, transformers have shaped the electricity supply industry, permitting generation to be located remotely from points of demand. All but a fraction of the world's electrical power has passed through a series of transformers by the time it reaches the consumer.

Transformers are some of the most efficient electrical 'machines', with some large units able to transfer 99.75% of their input power to their output. Transformers come in a range of sizes from a thumbnail-sized coupling transformer hidden inside a stage microphone to huge gigavolt-ampere-rated units used to interconnect portions of national power grids. All operate with the same basic principles, though a variety of designs exist to perform specialized roles throughout home and industry.

The transformer is based on two principles: first, that an electric current can produce a magnetic field (electromagnetism) and, second, that a changing magnetic field within a coil of wire induces a voltage across the ends of the coil (electromagnetic induction). By changing the current in the primary coil, one changes the strength of its magnetic field; since the secondary coil is wrapped around the same magnetic field, a voltage is induced across the secondary.

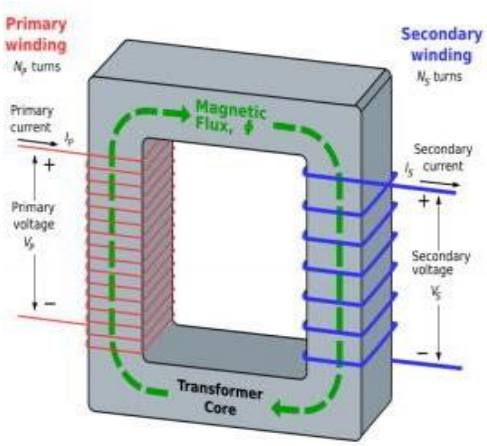

Fig An ideal step-down transformer

A simplified an ideal step-down transformer design is shown in the above figure. A current passing through the primary coil creates a magnetic field. The

primary and secondary coils are wrapped around a core of very high magnetic permeability, such as iron; this ensures that most of the magnetic field lines produced by the primary current are within the iron and pass through the secondary coil as well as the primary coil.

Rectifier

A rectifier is an electrical device that converts alternating current (AC), which periodically reverses direction, to direct current (DC), which flows in only one direction. The process is known as rectification. Rectifiers are used as components of power supplies and as detectors of radio signals. Mainly there are three types of rectifier i.e. half wave rectifier, full wave rectifier and Bridge Rectifier.

Half-wave rectifier

In half-wave rectification of a single-phase supply, either the positive or negative half of the AC wave is passed, while the other half is blocked. Because only one half of the input waveform reaches the output, mean voltage is lower. Half-wave rectification requires a single diode in a single-phase supply, or three in a three-phase supply. Rectifiers yield a unidirectional but pulsating direct current; half-wave rectifiers produce far more ripple than full-wave rectifiers, and much more filtering is needed to eliminate harmonics of the AC frequency from the output.

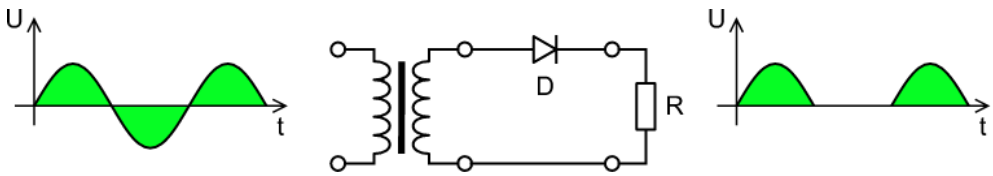

Fig Half Wave Rectifier

Full-wave rectifier

A full-wave rectifier converts the whole of the input waveform to one of constant polarity (positive or negative) at its output. Full-wave rectification converts both polarities of the input waveform to pulsating DC (direct current), and yields a higher average output voltage. Two diodes and a center tapped transformer are needed.

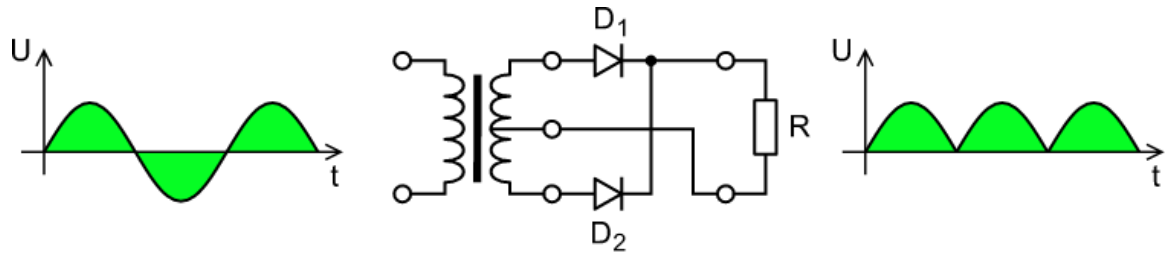

Fig Full-Wave Rectifier

Bridge Rectifier

A diode bridge is an arrangement of four (or more) diodes in a bridge circuit configuration that provides the same polarity of output for either polarity of input. When used in its most common application, for conversion of an alternating current (AC) input into a direct current (DC) output, it is known as a bridge rectifier. A bridge rectifier provides full-wave rectification from a two-wire AC input, resulting in lower cost and weight as compared to a rectifier with a 3-wire input from a transformer with a center-tapped secondary winding. The essential feature of a diode bridge is that the polarity of the output is the same regardless of the polarity at the input.

Basic operation

According to the conventional model of current flow, current is defined to be positive when it flows through electrical conductors from the positive to the negative pole. In actuality, free electrons in a conductor nearly always flow from the negative to the positive pole. In the vast majority of applications, however, the actual direction of current flow is irrelevant. Therefore, in the discussion below the conventional model is retained.

In the diagrams below, when the input connected to the left corner of the diamond is positive, and the input connected to the right corner is negative, current flows from the upper supply terminal to the right along the red (positive) path to the output, and returns to the lower supply terminal via the blue (negative) path.

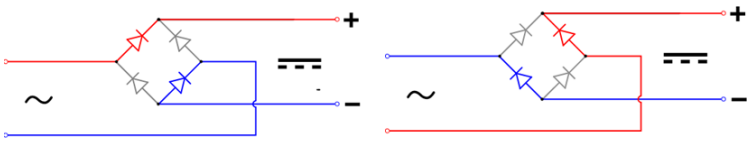

FigOperation of bridge rectifier

When the input connected to the left corner is negative, and the input connected to the right corner is positive, current flows from the lower supply terminal to the right along the red (positive) path to the output, and returns to the upper supply terminal via the blue (negative) path.

In each case, the upper right output remains positive and lower right output negative. Since this is true whether the input is AC or DC, this circuit not only produces a DC output from an AC input, it can also provide what is sometimes called "reverse polarity protection". That is, it permits normal functioning of DC-powered equipment when batteries have been installed backwards, or when the leads (wires) from a DC power source have been reversed, and protects the equipment from potential damage caused by reverse polarity.

IC Voltage Regulators

Voltage regulators comprise a class of widely used ICs. Regulator IC units contain the circuitry for reference source, comparator amplifier, control device, and overload protection all in a single IC. Although the internal construction of the IC is somewhat different from that described for discrete voltage regulator circuits, the external operation is much the same. IC units provide regulation of either a fixed positive voltage, a fixed negative voltage, or an adjustable set

voltage. A power supply can be built using a transformer connected to the ac supply line to step the ac voltage to desired amplitude, then rectifying that ac voltage, filtering with a capacitor and RC filter, if desired, and finally regulating the dc voltage using an IC regulator. The regulators can be selected for operation with load currents from hundreds of milliamperes to tens of amperes, corresponding to power ratings from milliwatts to tens of watts.

Three-Terminal Voltage Regulators

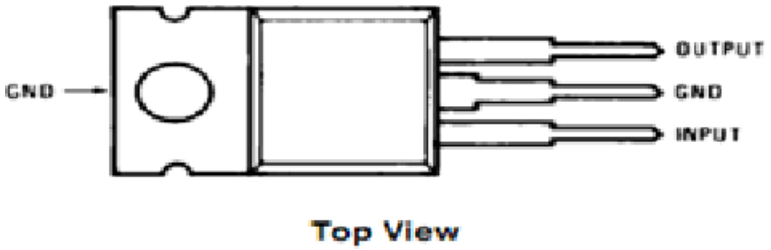

Fig Three-Terminal Voltage Regulators

Figure shows the basic connection of a three-terminal voltage regulator IC to a load. The fixed voltage regulator has an unregulated dc input voltage, V_i, applied to one input terminal, a regulated output dc voltage, V_o, from a second terminal, with the third terminal connected to ground. For a selected regulator, IC device specifications list a voltage range over which the input voltage can vary to maintain a regulated output voltage over a range of load current. The specifications also list the amount of output voltage change resulting from a change in load current (load regulation) or in input voltage (line regulation). The series 78 regulators provide fixed regulated voltages from 5 to 24 V. Figure shows how one such IC, a 7805, is connected to provide voltage regulation with output from this unit of +5V dc. An unregulated input voltage V is filtered by capacitor C1 and connected to the IC's IN terminal. The IC's OUT terminal provides a regulated + 12V which is filtered by capacitor C2 (mostly for any high-frequency noise). The third IC terminal is connected to ground (GND). While the input voltage may vary over some permissible voltage range, and the

output load may vary over some acceptable range, the output voltage remains constant within specified voltage variation limits. These limitations are spelled out in the manufacturer's specification sheets. There are two types of voltage regulator they are 78xx series and 79xx series.

78xx series

There are common configurations for 78xx ICs, including 7805 (5 V), 7806 (6 V), 7808 (8 V), 7809 (9 V), 7810 (10 V), 7812 (12 V), 7815 (15 V), 7818 (18 V), and 7824 (24 V) versions. The 7805 is the most common, as its regulated 5-volt supply provides a convenient power source for most TTL components.

Less common are lower-power versions such as the LM78Mxx series (500 mA) and LM78Lxx series (100 mA) from National Semiconductor. Some devices provide slightly different voltages than usual, such as the LM78L62 (6.2 volts) and LM78L82 (8.2 volts) as well as the STMicroelectronics L78L33ACZ (3.3 volts).

4.4 software requirement

ARDUINO SOFTWARE (IDE)

The Arduino Integrated Development Environment - or Arduino Software (IDE) - contains a text editor for writing code, a message area, a text console, a toolbar with buttons for common functions and a series of menus. It connects to the Arduino hardware to upload programs and communicate with them.

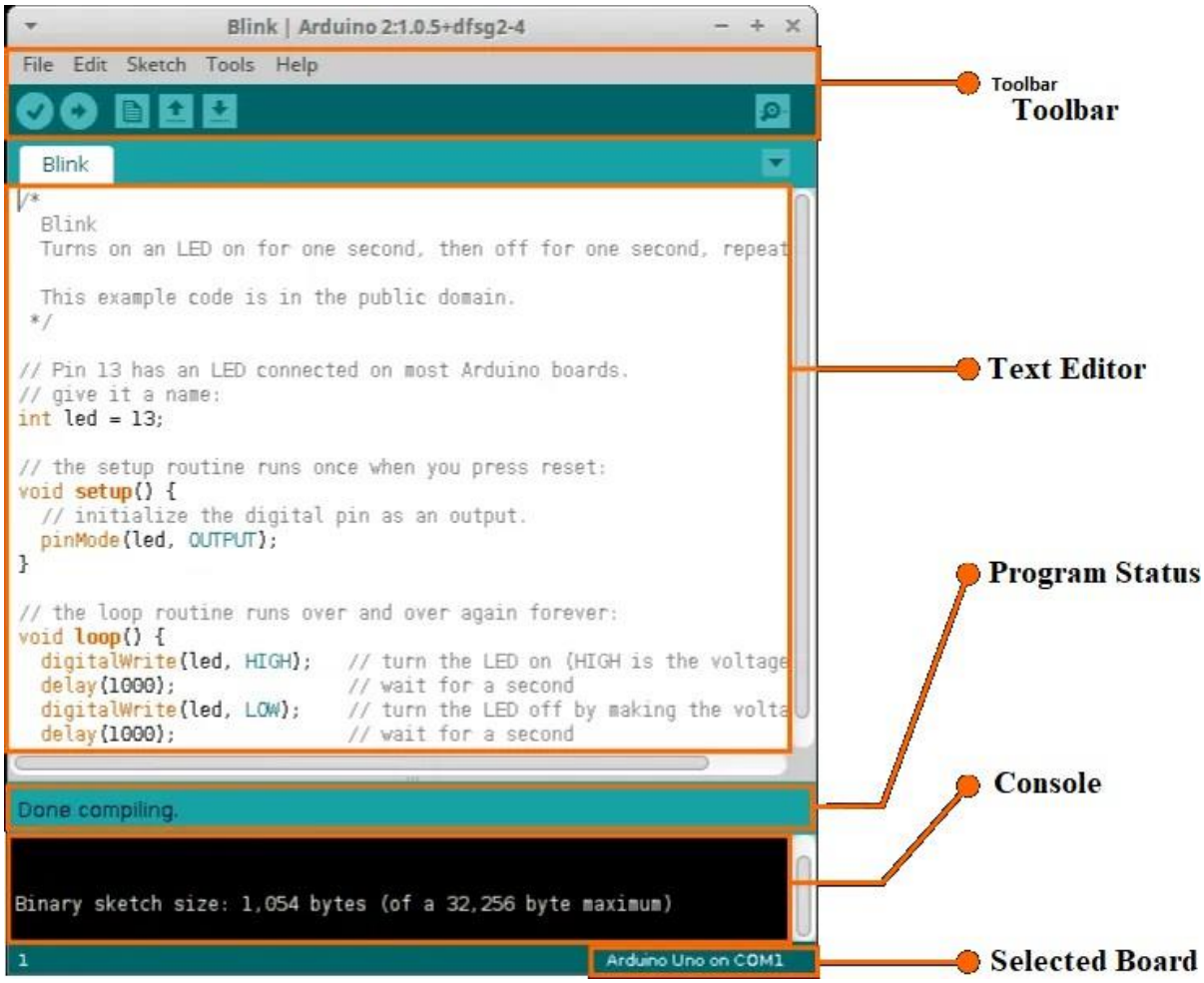

Fig Arduino IDE

- **Writing Sketches**

Programs written using Arduino Software (IDE) are called sketches. These sketches are written in the text editor and are saved with the file extension .ino. The editor has features for cutting/pasting and for searching/replacing text. The message area gives feedback while saving and exporting and also displays errors. The console displays text output by the Arduino Software (IDE), including complete error messages and other information. The bottom righthand corner of the window displays the configured board and serial port. The toolbar buttons allow you to verify and upload programs, create, open, and save sketches, and open the serial monitor.

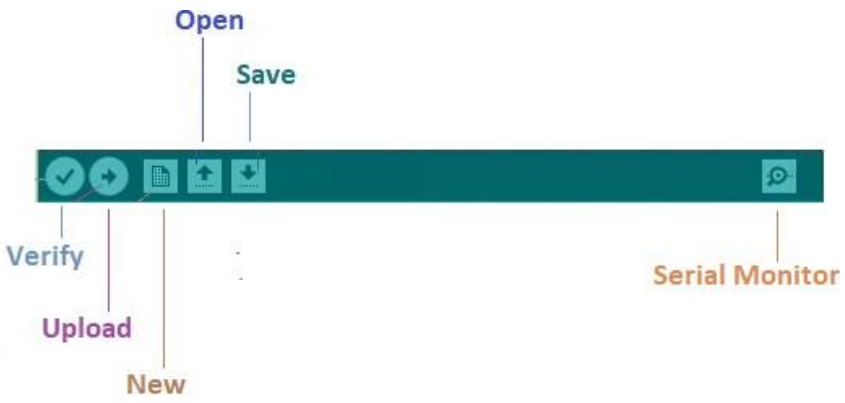

Fig Arduino IDE Tool Icon

- **Verify** Checks your code for errors compiling it.
- **Upload** Compiles your code and uploads it to the configured board. See uploading below for details. Note: If you are using an external programmer with your board, you can hold down the "shift" key on your computer when using this icon. The text will change to "Upload using Programmer"
- **New** Creates a new sketch.
- **Open** Presents a menu of all the sketches in your sketchbook. Clicking one will open it within the current window overwriting its content.
- **Save** Saves your sketch.
- **SerialMonitor** Opens the serial monitor.

Additional commands are found within the five menus: File, Edit, Sketch, Tools, Help. The menus are context sensitive, which means only those items relevant to the work currently being carried out are available.

File

- **New** Creates a new instance of the editor, with the bare minimum structure of a sketch already in place.
- **Open** Allows to load a sketch file browsing through the computer drives and folders.

- **Open** Recent Provides a short list of the most recent sketches, ready to be opened.
- **Sketchbook** Shows the current sketches within the sketchbook folder structure; clicking on any name opens the corresponding sketch in a new editor instance.
- **Examples** Any example provided by the Arduino Software (IDE) or library shows up in this menu item. All the examples are structured in a tree that allows easy access by topic or library.
- **Close** Closes the instance of the Arduino Software from which it is clicked.
- **Save** Saves the sketch with the current name. If the file hasn't been named before, a name will be provided in a "Save as.." window.
- **Save as...** Allows to save the current sketch with a different name.
- **Page Setup** It shows the Page Setup window for printing.
- **Print** Sends the current sketch to the printer according to the settings defined in Page Setup.
- **Preferences** Opens the Preferences window where some settings of the IDE may be customized, as the language of the IDE interface.
- **Quit** Closes all IDE windows. The same sketches open when Quit was chosen will be automatically reopened the next time you start the IDE.

Edit

- **Undo/Redo** Goes back of one or more steps you did while editing; when you go back, you may go forward with Redo.
- **Cut** Removes the selected text from the editor and places it into the clipboard.
- **Copy** Duplicates the selected text in the editor and places it into the clipboard.

- **Copy for Forum** Copies the code of your sketch to the clipboard in a form suitable for posting to the forum, complete with syntax coloring.
- **Copy as HTML** Copies the code of your sketch to the clipboard as HTML, suitable for embedding in web pages.
- **Paste** Puts the contents of the clipboard at the cursor position, in the editor.
- **Select All** Selects and highlights the whole content of the editor.
- **Comment/Uncomment** Puts or removes the // comment marker at the beginning of each selected line.
- **Increase/Decrease** Indent Adds or subtracts a space at the beginning of each selected line, moving the text one space on the right or eliminating a space at the beginning.
- **Find Opens** the Find and Replace window where you can specify text to search inside the current sketch according to several options.
- **Find Next** Highlights the next occurrence - if any - of the string specified as the search item in the Find window, relative to the cursor position.
- **Find Previous** Highlights the previous occurrence - if any - of the string specified as the search item in the Find window relative to the cursor position.

Sketch

- **Verify/Compile** Checks your sketch for errors compiling it; it will report memory usage for code and variables in the console area.
- **Upload** Compiles and loads the binary file onto the configured board through the configured Port.
- **Upload Using Programmer** This will overwrite the bootloader on the board; you will need to use Tools > Burn Bootloader to restore it and be able to Upload to USB serial port again. However, it allows you to use the full

capacity of the Flash memory for your sketch. Please note that this command will NOT burn the fuses. To do so a Tools -> Burn Bootloader command must be executed.

- **Export** Compiled Binary Saves a .hex file that may be kept as archive or sent to the board using other tools.
- **Show Sketch Folder** Opens the current sketch folder.
- **Include Library** Adds a library to your sketch by inserting #include statements at the start of your code. For more details, see libraries below. Additionally, from this menu item you can access the Library Manager and import new libraries from .zip files.
- Add File... Adds a source file to the sketch (it will be copied from its current location). The new file appears in a new tab in the sketch window. Files can be removed from the sketch using the tab menu accessible clicking on the small triangle icon below the serial monitor one on the right side o the toolbar.

Tools

- **Auto Format** This formats your code nicely: i.e. indents it so that opening and closing curly braces line up, and that the statements inside curly braces are indented more.
- **Archive Sketch** Archives a copy of the current sketch in .zip format. The archive is placed in the same directory as the sketch.
- **Fix Encoding & Reload** Fixes possible discrepancies between the editor char map encoding and other operating systems char maps.
- **Serial Monitor** Opens the serial monitor window and initiates the exchange of data with any connected board on the currently selected Port. This usually resets the board, if the board supports Reset over serial port opening.
- **Board** Select the board that you're using. See below for descriptions of the various boards.

- **Port** This menu contains all the serial devices (real or virtual) on your machine. It should automatically refresh every time you open the top-level tools menu.
- **Programmer** For selecting a hardware programmer when programming a board or chip and not using the onboard USB-serial connection. Normally you won't need this, but if you're burning a bootloader to a new microcontroller, you will use this.
- **Burn Bootloader** The items in this menu allow you to burn a bootloader onto the microcontroller on an Arduino board. This is not required for normal use of an Arduino board but is useful if you purchase a new ATmega microcontroller (which normally comes without a bootloader). Ensure that you've selected the correct board from the Boards menu before burning the bootloader on the target board. This command also set the right fuses.

Help

Here you find easy access to a number of documents that come with the Arduino Software (IDE). You have access to **Getting Started, Reference**, this guide to the IDE and other documents locally, without an internet connection. The documents are a local copy of the online ones and may link back to our online website.

Find in Reference This is the only interactive function of the Help menu: it directly selects the relevant page in the local copy of the Reference for the function or command under the cursor.

Sketchbook

The Arduino Software (IDE) uses the concept of a sketchbook: a standard place to store your programs (or sketches). The sketches in your sketchbook can be opened from the File > Sketchbook menu or from the Open button on the toolbar. The first time you run the Arduino software, it will automatically

create a directory for your sketchbook. You can view or change the location of the sketchbook location from with the Preferences dialog.

- Tabs, Multiple Files, and Compilation

Allows you to manage sketches with more than one file (each of which appears in its own tab). These can be normal Arduino code files (no visible extension), C files (.c extension), C++ files (.cpp), or header files (.h).

Before compiling the sketch, all the normal Arduino code files of the sketch (.ino, .pde) are concatenated into a single file following the order the tabs are shown in. The other file types are left as is.

Uploading

Before uploading your sketch, you need to select the correct items from the Tools > Board and Tools > Port menus. The boards are described below. On the Mac, the serial port is probably something like /dev/tty.usbmodem241 (for an Uno or Mega2560 or Leonardo) or /dev/tty.usbserial-1B1 (for a Duemilanove or earlier USB board), or /dev/tty.USA19QW1b1P1.1 (for a serial board connected with a Keyspan USB-to-Serial adapter). On Windows, it's probably COM1 or COM2 (for a serial board) or COM4, COM5, COM7, or higher (for a USB board) - to find out, you look for USB serial device in the ports section of the Windows Device Manager. On Linux, it should be /dev/ttyACMx , /dev/ttyUSBx or similar. Once you've selected the correct serial port and board, press the upload button in the toolbar or select the Upload item from the Sketch menu. Current Arduino boards will reset automatically and begin the upload. With older boards (pre-Diecimila) that lack auto-reset, you'll need to press the reset button on the board just before starting the upload. On most boards, you'll see the RX and TX LEDs blink as

the sketch is uploaded. The Arduino Software (IDE) will display a message when the upload is complete, or show an error.

When you upload a sketch, you're using the Arduino bootloader, a small program that has been loaded on to the microcontroller on your board. It allows you to upload code without using any additional hardware. The bootloader is active for a few seconds when the board resets; then it starts whichever sketch was most recently uploaded to the microcontroller. The bootloader will blink the on-board (pin 13) LED when it starts (i.e. when the board resets).

Libraries

Libraries provide extra functionality for use in sketches, e.g. working with hardware or manipulating data. To use a library in a sketch, select it from the Sketch > Import Library menu. This will insert one or more #include statements at the top of the sketch and compile the library with your sketch. Because libraries are uploaded to the board with your sketch, they increase the amount of space it takes up. If a sketch no longer needs a library, simply delete its #include statements from the top of your code.

There is a list of libraries in the reference. Some libraries are included with the Arduino software. Others can be downloaded from a variety of sources or through the Library Manager. Starting with version 1.0.5 of the IDE, you do can import a library from a zip file and use it in an open sketch. See these instructions for installing a third-party library.

REVIEW OF LITERATURE

5 REVIEW OF LITERATURE

K. Prabhu Chandran [1] proposed a Li-Fi assisted fishermen tracking system using Visible Light Communication (VLC) for maritime safety. The system addresses the risks of unclear international boundaries by providing real-time alerts to fishermen when they approach restricted zones. Unlike conventional GPS-based systems, this approach utilizes Li-Fi signals for transmitting location and safety data with reduced complexity. Multiple sensors such as gas, fire, and water leakage detectors are integrated onboard, with their information delivered via Li-Fi and converted into audio signals for immediate awareness. By enabling fast, secure, and continuous monitoring of maritime activity, the system helps prevent accidental boundary trespassing and ensures timely response during emergencies, thereby improving overall safety for fishermen operating near international waters.

Ravi Kumar M and Shivani M [2] introduced a Wi-Fi enabled IoT framework for fishermen tracking and communication. The system employs GPS tracking to monitor fishing boats in real-time and Wi-Fi modules to facilitate two-way communication between vessels and coastal stations. It enables fishermen to receive weather alerts, maritime boundary notifications, and send distress signals during emergencies, ensuring quick rescue coordination. By combining IoT sensors with wireless connectivity, this framework enhances communication reliability, operational safety, and situational awareness for fishermen navigating challenging sea conditions.

T. Balamani and R. Bharathi [3] developed an intelligent maritime boundary protection system utilizing RSSI-based localization for detecting fishing vessel positions. Coastal base stations calculate a boat’s distance from international borders by analyzing Received Signal Strength Indicator (RSSI) values. When a vessel nears restricted waters, the system delivers real-time alerts to the

fishermen, thereby preventing boundary violations. Unlike satellite-dependent GPS, this approach provides accurate localization with fewer limitations, enhancing maritime safety and reducing accidental cross-border incidents.

P. Nandhini and Hariharan M [4] proposed *OceanLink*, a blockchain-integrated IoT framework designed to improve both fishermen's safety and economic resilience. IoT devices ensure real-time tracking, weather alerts, and secure distress communication, while blockchain provides tamper-proof data storage for fishing activity, catch data, and financial transactions. This transparent ecosystem allows fishermen to trade directly with buyers, reducing dependence on intermediaries. During emergencies, authenticated distress messages are securely transmitted via blockchain nodes to rescue authorities. The integration of IoT and blockchain ensures safety, transparency, and economic sustainability for fishermen communities.

T. Balamani, R. Bharathi, and Keerrthi S [5] proposed an intelligent maritime boundary protection system using GPS and automatic engine control. The system continuously monitors the fishing boat's position relative to international waters and automatically shuts down the engine if the vessel attempts to cross into restricted areas. Alongside this preventive measure, fishermen receive real-time alerts and notifications to ensure compliance with maritime regulations. This integrated solution not only reduces accidental trespassing but also safeguards fishermen against arrests and boat confiscation, providing a reliable mechanism for enhanced maritime security.

Karthik, G. M., et al. [6] proposed an improved GPS-assisted fishermen tracking system that integrates Internet of Things (IoT) connectivity with a smart-sensor association framework. The system fuses data from onboard GPS units and a set of environmental and status sensors (fuel/engine state, battery, and proximity/sonar-like sensors) with an IoT gateway to provide continuous

location and vessel-health monitoring. Location and sensor data are transmitted to a cloud platform where low-latency processing and rule-based logic detect abnormal events (straying from permitted zones, engine failure, or prolonged inactivity) and trigger automated alerts to fishermen, fleet managers, and coastal authorities. By combining GPS accuracy with contextual sensor data and cloud-based alerts, the approach improves situational awareness, reduces response times to emergencies, and helps prevent accidental border crossing and equipment loss — offering a practical, scalable enhancement to conventional GPS tracking for small fishing craft.

Rahman, Maria, et al [7] present a monitoring system for fishermen focused on the design and analysis of a graphical user interface (GUI) that centralizes vessel status and alerts for non-technical users. The work details GUI requirements, wireframes, and interaction flows that prioritize clarity under stressful conditions: large font status indicators, simplified map views, contextual alert cards, and one-touch acknowledgement/response actions. Backed by simulated data streams (GPS, engine telemetry, and distress signals), the study evaluates usability metrics and response time improvements for typical fishermen and shore supervisors. The human-centred GUI design reduces cognitive load during critical events and increases the likelihood that fishermen and controllers will correctly interpret and act on automated warnings, thereby enhancing adoption and effectiveness of monitoring systems in real operational settings.

Elaurza, Christian, et al. [8] developed “Safe Vessels,” a web-based GPS vessel-tracking platform aimed specifically at improving security and safety for fishers in Aparri, Cagayan. The system aggregates real-time GPS feeds from registered vessels into an accessible web dashboard that provides live positioning, historical tracks, geofencing alerts, and report generation for community managers. The platform emphasizes low barrier to entry —

requiring only low-cost GPS trackers and a simple mobile/web interface — and integrates local contact lists and automated SMS/email notifications for emergencies. By providing community stakeholders with persistent visibility of vessel movements and a simple mechanism for rapid notification, the solution strengthens collective safety, facilitates faster search-and-rescue coordination, and supports compliance with local maritime regulations.

Karthikeyan, P., Chih-Chun Chang, and Pao-Ann Hsiung[9] investigate labor-exploitation detection by combining statistical analysis with multiple-object tracking techniques in maritime/port scenarios. Their approach applies computer-vision based multi-object tracking to video footage and derives statistical features (movement patterns, dwell times, group formations) that can indicate anomalous behavior consistent with labor exploitation or illegal transfers. The pipeline couples robust tracking (to maintain identity across frames) with higher-level temporal analytics to surface suspicious events for human investigators. While focused on port/video contexts rather than open-sea small boats, the methodology demonstrates how automated tracking plus statistical profiling can assist authorities in detecting exploitation patterns early, prioritize human review, and provide objective evidence for investigations.

Divya, B., et al. [10] propose a Border Detection for Fishermen system using IoT that emphasizes geofencing and automated interdiction measures for small fishing craft. Their architecture places lightweight IoT nodes on vessels to stream GPS coordinates to an edge gateway which enforces geofence policies; when a vessel approaches or crosses a predefined boundary, the system issues layered responses — local audible/visual alarms on the boat, automated notifications to the fisher and shore command, and optional engine-lock or remote-assistance triggers depending on policy. Emphasizing low power and low data usage, the design prioritizes resilience in low-connectivity maritime environments. The integrated geofence + IoT approach reduces accidental

incursions, improves compliance with maritime boundaries, and offers a protective mechanism that helps fishermen avoid legal penalties and promotes safer, community-aware navigation.

DEFINITION OF THE PROBLEM AND SCOPE OF THE RESEARCH WORK

6. DEFINITION OF THE PROBLEM AND SCOPE OF THE RESEARCH WORK

6.1 DEFINITION OF THE PROBLEM

Fishermen often encounter critical challenges when venturing into the sea due to limited communication facilities, unpredictable weather conditions, and the risk of unintentionally crossing maritime boundaries. Traditional methods such as mobile phones and radios are unreliable in deep-sea areas, leaving fishermen isolated and vulnerable during emergencies. Sudden environmental changes, equipment failures, or accidental entry into restricted waters can lead to severe safety risks, financial losses, or even legal consequences. The lack of an efficient, long-range, and dependable communication and tracking system highlights the urgent need for a solution that ensures continuous monitoring, timely alerts, and emergency support to safeguard the lives and livelihoods of fishermen.

6.2 SCOPE OF THE RESEARCH WORK

The scope of the proposed Fishermen Tracking and Communication System extends far beyond simple location monitoring, as it is designed to address the critical safety, security, and communication challenges faced by fishermen at sea. This research work aims to provide a comprehensive framework that ensures real-time connectivity between fishing boats and shore stations, enabling continuous monitoring of fishermen’s movement and timely sharing of important information. The scope includes developing a reliable communication network that can transmit data over long distances, ensuring that fishermen remain connected even when they move far from the shore. By integrating features such as real-time tracking, weather alerts, and maritime boundary detection, the system works as a preventive and protective solution against both natural and man-made risks. Another vital part of the scope is the inclusion of

an automatic engine cutoff mechanism, which ensures that fishing vessels do not cross into restricted waters, thereby preventing legal issues and safeguarding lives. The research also extends to the emergency communication aspect, where fishermen can send distress signals that are relayed instantly to shore authorities and rescue teams for immediate assistance. This creates a dependable safety net that reduces response time during crises. Beyond safety, the scope of this system includes providing reassurance and peace of mind to fishermen's families, as they can know the real-time position of their loved ones at sea. Furthermore, the proposed system can be expanded to support additional applications such as data logging for fisheries management, resource tracking, and even integration with advanced maritime surveillance systems in the future. Overall, the scope of this research work is to create a robust, multi-functional, and scalable solution that not only secures fishermen's lives but also contributes to sustainable and lawful fishing practices, making it a valuable tool for both individuals and authorities involved in maritime operations.

ARCHITECTURE DESIGN

7. ARCHITECTURE DESIGN

The architecture design diagram of the proposed fisherman tracking system plays a crucial role in understanding how different components of the system interact to achieve continuous monitoring, boundary alerting, engine control, and communication support for fishermen. At the core of the architecture lies the control unit, which integrates sensor inputs, location processing modules, communication modules, and actuator control. The fishing boat is continuously monitored through its location-tracking mechanism that determines its distance from the maritime boundary. This information flows into the processing unit where it is compared against predefined threshold values stored in the system's database. If the location indicates that the boat is within one kilometer of the restricted boundary, the control unit sends a signal to the alert system, which generates an audible and visual warning to notify fishermen about their proximity to danger. This allows sufficient reaction time for corrective navigation.

When the boat continues beyond this limit and enters the 500-meter range, the system activates the engine control mechanism. This module directly interfaces with the engine circuitry and stops the engine automatically, preventing further forward movement. The architecture design ensures that the stopping mechanism is reliable and cannot be bypassed by manual control at the moment of boundary crossing. By embedding safety at the hardware and software level, the architecture maintains consistency in operation, thereby guaranteeing that fishermen cannot unintentionally or unknowingly cross into international waters. To avoid false triggers, the design incorporates redundancy through verification of the position signal, ensuring that the stopping action only occurs when the boat truly approaches the defined limit.

Alongside the monitoring and engine control subsystems, the architecture also integrates a communication module to handle requests and emergency support messages. This module is connected to the control unit and enables fishermen to send short request signals whenever they require urgent help such as food, fuel, or other support from people on land. These messages are transmitted through a reliable communication interface and reach the monitoring station or relevant authorities, who can then take necessary actions to support the fishermen. The communication flow is designed to be simple so that even in stressful situations, fishermen can send the message quickly without complex operations. This part of the architecture ensures human connectivity in remote sea conditions where physical assistance is difficult.

The architecture design diagram further illustrates the interaction between land-based monitoring stations and the fishing boat. Land stations maintain a database of fishing boats and receive real-time updates about alerts, warnings, or emergency requests. When a boat sends an emergency request message, the land unit processes it and immediately initiates support actions. This feedback loop ensures that fishermen are not left stranded without help. Similarly, alerts triggered at the boat level are also stored at the land station, which can be used for analyzing movement trends, monitoring compliance, and providing evidence of safe navigation. The dual flow of data between the sea-based system and the land-based monitoring unit strengthens the architecture, making it resilient and dependable.

Another important layer of the architecture is the power management system that supports continuous operation at sea. The modules for tracking, alerting, communication, and engine control are designed to consume low power and can operate on the boat’s existing power supply. Backup power options are included in the architecture to ensure that even if the primary source fails, the tracking and communication modules remain active. This avoids

system shutdown in critical moments and ensures uninterrupted safety coverage. The modular nature of the design also allows for scalability, meaning additional features such as weather alerts or automatic distress signaling can be integrated in the future without altering the existing architecture drastically.

The overall architecture design highlights a smooth integration of hardware and software units. Sensors collect positional data, the processor evaluates the distance from the boundary, the alert system notifies the fishermen, the engine control ensures prevention, and the communication unit manages requests for help. Each of these blocks is interconnected with clear data flow, minimizing delays and errors. The architecture diagram visually represents these modules as interconnected blocks with bidirectional data paths where necessary. The land monitoring unit is shown as an external entity connected to the communication module, thereby completing the feedback loop. The layered design provides clarity, ensures robustness, and emphasizes safety as the highest priority.

In the architecture design diagram of the fisherman tracking system provides a clear visual and functional representation of how the system works as a unified solution. By linking monitoring, alerting, engine control, and communication in a single framework, the architecture ensures that fishermen remain safe, boundary violations are avoided, and emergency support is always accessible. Its modularity, reliability, and redundancy make it adaptable for real-world applications, ensuring that the system not only prevents accidental trespassing but also provides a strong line of support for fishermen during critical sea journeys. This detailed architecture ensures that the system is practical, scalable, and highly effective for enhancing safety in coastal fishing operations.

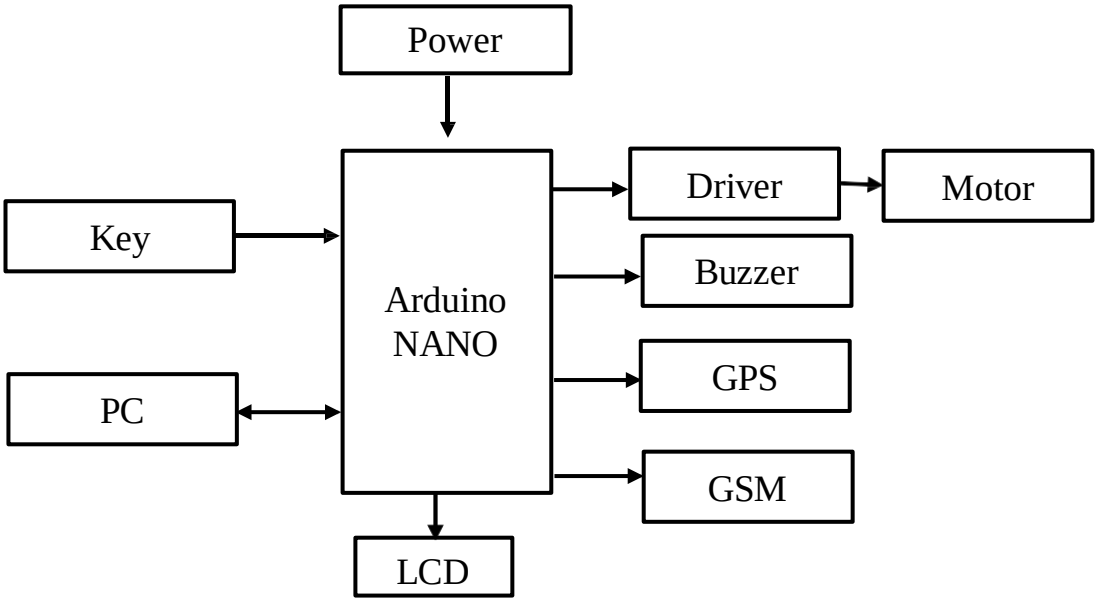

Fig System Architecture

RESULT AND DISCUSSION

8. RESULT AND DISCUSSION

The implementation of the proposed fisherman tracking system has shown promising results in terms of safety, reliability, and usability during sea operations. When tested in simulated conditions, the system successfully identified the boat's location and provided timely alerts when approaching the maritime boundary. The pre-warning alert triggered at one kilometer was accurate and gave fishermen sufficient time to alter their navigation path, thereby preventing accidental crossing. Furthermore, the automatic engine stop mechanism at 500 meters functioned effectively, halting the boat without delay and ensuring that movement into restricted zones was strictly avoided. This result highlights the robustness of the integration between the control unit and the engine circuitry. The emergency communication module also performed as intended, allowing fishermen to transmit short request messages to land-based stations for food, fuel, or other assistance. Feedback from simulated land monitoring units indicated that communication was clear and responsive, ensuring fishermen are not left unsupported in critical situations. Overall, the system design proved to be dependable, and the results align well with the project objectives of improving safety and providing emergency support. The discussion emphasizes that combining boundary alerts, preventive engine control, and reliable communication creates a holistic solution for fishermen's safety in coastal and deep-sea regions.

CONCLUSION AND FUTURE ENHANCEMENT

9. CONCLUSION AND FUTURE ENHANCEMENT

9.1 CONCLUSION

The fisherman tracking system developed in this project provides a practical and efficient solution to the long-standing challenges faced by fishermen at sea. The system ensures that fishermen are alerted well in advance when approaching maritime boundaries, thereby reducing the risk of unintentional trespassing into international waters. The automatic engine stop mechanism further strengthens safety by enforcing boundary protection when the boat reaches within 500 meters of the restricted limit. This feature directly addresses issues of accidental crossing, legal complications, and threats to the fishermen's lives. The communication module adds further value by enabling fishermen to send emergency requests to land stations in situations where food, fuel, or other support is needed, thereby ensuring they are not isolated during crises. The results demonstrate that the integration of monitoring, alerting, engine control, and communication provides a complete solution that supports both safety and livelihood protection. The project not only highlights the importance of technology in protecting fishermen but also shows how simple yet effective mechanisms can be applied to real-world challenges. In conclusion, this system stands as a reliable, scalable, and practical innovation that addresses both security and support needs of fishermen during their sea journeys.

9.2 Future Enhancement

In the future, the system can be enhanced by integrating Artificial Intelligence (AI) to predict weather patterns more accurately and provide advanced warnings. The addition of solar-powered modules could extend operational time and reduce dependency on external charging. Data storage and

cloud integration can be introduced for long-term tracking and analysis of fishing activities. Further, mobile app integration would allow families to directly access live updates about the fishermen. Expanding the system to support multilingual voice alerts could improve usability among diverse fishing communities. Finally, collaboration with government agencies can strengthen its role as a large-scale maritime safety solution.

REFERENCE

10. REFERENCE

[1] Balamani, T., and R. Bharathi. "Intelligent Maritime Boundary Protection System for Fishermen Utilizing GPS and Engine Control." 2025 International Conference on Computing and Communication Technologies (ICCCT). IEEE, 2025.

[2] Balamani, T., and R. Bharathi. "Intelligent Maritime Boundary Protection System for Fishermen Using RSSI-Based Localization." 2025 6th International Conference on Inventive Research in Computing Applications (ICIRCA). IEEE, 2025.

[3] Balamani, T., and R. Bharathi. "Intelligent Maritime Boundary Protection System for Fishermen Using RSSI-Based Localization." 2025 6th International Conference on Inventive Research in Computing Applications (ICIRCA). IEEE, 2025.

[4] Amuthakkannan, Rajakannu, et al. "A review to do fishermen boat automation with artificial intelligence for sustainable fishing experience ensuring safety, security, navigation and sharing information for Omani fishermen." Journal of Marine Science and Engineering 11.3 (2023): 630.

[5] Barlian, Erland. "Optimizing Fish Production: The Influence of Digital Technologies on Sustainability and Well-being of Indonesian Artisanal Fishermen." Journal of Business & Applied Management 18.1 (2025): 35-46.

[6] Karthik, G. M., et al. "An Improved GPS Assisted Fishermen Tracking System Using Internet of Things with Smart Sensors Association." 2024 4th Asian Conference on Innovation in Technology (ASIANCON). IEEE, 2024.

[7] Rahman, Maria, et al. "A monitoring system for fisherman: design and analysis of GUI." (2024).

[8] Elaurza, Christian, et al. "Safe Vessels: Enhancing Security and Safety for Aparri, Cagayan Fishers through Web-Based GPS Vessel Tracking." Journal of Pure and Applied Sciences 4.2 (2024).

[9] Vishwa, B., R. Vishwanath, and N. T. Ramprasath. "Comprehensive Security Systems for Fishermen." 2024 International Conference on Power, Energy, Control and Transmission Systems (ICPECTS). IEEE, 2024.

[10] Balamani, T., and R. Bharathi. "Intelligent Maritime Boundary Protection System for Fishermen Utilizing GPS and Engine Control." 2025 International Conference on Computing and Communication Technologies (ICCCT). IEEE, 2025.

[11] Karthik, G. M., et al. "An Improved GPS Assisted Fishermen Tracking System Using Internet of Things with Smart Sensors Association." 2024 4th Asian Conference on Innovation in Technology (ASIANCON). IEEE, 2024.

[12] Rahman, Maria, et al. "A monitoring system for fisherman: design and analysis of GUI." (2024).

[13] Elaurza, Christian, et al. "Safe Vessels: Enhancing Security and Safety for Aparri, Cagayan Fishers through Web-Based GPS Vessel Tracking." Journal of Pure and Applied Sciences 4.2 (2024).

[14] Karthikeyan, P., Chih Chun Chang, and Pao-Ann Hsiung. "Labor exploitation investigation using statistical and multiple object tracking assessment methods." Multimedia Tools and Applications 82.29 (2023): 46085-46108.

[15] Divya, B., et al. "Border Detection for Fishermen Using IoT." 2024 International Conference on Power, Energy, Control and Transmission Systems (ICPECTS). IEEE, 2024.

PAPER PUBLICATION

IoT-Based Fishermen Tracking and Boundary Protection with Integrated Emergency Messaging

DR.R.PREETHI, KARTHICK S, KARPAGA VINAYAGAM R P, KARTHI L

UG DEPARTMENT OF COMPUTER APPLICATIONS
BISHOP HEBER COLLEGE(AUTONOMOUS) , TIRUCHIRAPPALLI
[1]Assistent professor [234] Students III- BCA 'E'

Abstract: Fishing remains a primary livelihood for many coastal communities, but fishermen often encounter serious challenges when venturing into the sea, especially the risk of unintentionally crossing international maritime boundaries. Such incidents may lead to legal issues, loss of equipment, or even danger to life. To overcome this problem, the proposed system introduces an intelligent fisherman tracking and safety solution that ensures both boundary protection and reliable communication. The system works by continuously monitoring the position of the fishing boat. When the boat approaches within one kilometer of the maritime border, an early warning alert is triggered to notify the fishermen about their proximity to the restricted zone. If the boat continues further and reaches within 500 meters of the border, the engine is automatically stopped, thereby preventing accidental trespassing into international waters. Beyond boundary protection, the system also integrates a communication feature that allows fishermen to send short request messages to land-based people in case of emergencies, such as food, fuel, or medical needs. This combination of real-time monitoring, preventive control, and support communication ensures improved safety, reduces boundary violations, and strengthens the confidence of fishermen while carrying out their activities in the sea.

Keywords— Fisherman safety, maritime boundary alert, real-time tracking, automatic engine control, emergency communication.

I. INTRODUCTION

Fishing has always been one of the oldest and most important occupations for human society, especially for people living near coastal areas. For many families, it is not just a job but the only source of livelihood that provides food, income, and survival. Fishermen often spend long hours, and sometimes even days, in the sea searching for their catch. While fishing plays such a vital role in the economy and daily life, it is also filled with risks and uncertainties. One of the biggest challenges that fishermen face is the lack of proper communication once they move away from the shore. Unlike people on land who can easily connect with each other,

fishermen often lose contact when they are deep at sea. This lack of communication creates serious problems, especially when emergencies arise.

Fig 1.1 Fishing

The sea is an unpredictable environment. Sudden storms, strong winds, and rough waves can appear without much warning. When such situations occur, fishermen may not have the means to alert their families or authorities for help. Many unfortunate incidents have been reported where boats capsized or fishermen went missing simply because there was no proper way to send or receive messages in time. This not only puts the lives of fishermen in danger but also leaves their families in constant worry about their safety. If a fisherman does not return on time, families are left waiting without knowing whether he is safe, lost, or in need of urgent help. A simple and reliable communication system can reduce such fears and save many lives.

Another major problem fishermen face is unknowingly crossing into restricted or foreign waters. In the middle of the sea, there are no clear marks or visible borders, and it becomes difficult for fishermen to know when they are nearing another country's area. This often results in accidental crossings, which can lead to arrests, heavy fines, or even the seizure of their boats. Many fishermen who unintentionally cross such boundaries are treated as offenders, even though their only intention was to continue fishing. A proper communication system can warn them in advance and guide them to stay within safe and legal waters.

Apart from safety concerns, communication also plays an important role in improving the efficiency of fishing activities. If fishermen are able to stay in touch with coastal stations or other boats, they can share useful information such as safe fishing zones, weather conditions, or emergency needs. In case a boat breaks down or runs out of fuel in the middle of the sea, quick communication with the shore or nearby boats can ensure timely assistance. Without such support, small technical failures can turn into life-threatening situations. Thus, an effective communication system not only improves safety but also builds a sense of cooperation and community among fishermen.

Furthermore, communication systems can support better management of resources. When fishermen are connected, information can be shared about which areas have already been heavily fished and which areas should be avoided to allow fish to multiply again. This helps in protecting marine resources and promoting sustainable fishing practices. It also allows local authorities to keep track of fishing activities and provide necessary support during peak seasons. For the fishermen, being connected means less time wasted in uncertain areas and more time focused on productive work, which increases their income and stability.

The mental well-being of fishermen and their families is another important aspect linked with communication. Long fishing trips often separate fishermen from their families, sometimes for days or weeks. Families on land remain anxious about the safety of their loved ones, especially when the sea is rough or when fishermen do not return as expected. A simple message or alert system can bridge this emotional gap, giving confidence to families that their loved ones are safe and in touch. For fishermen too, knowing that they can call for help or inform their families brings a sense of relief and confidence while working in the middle of the sea.

In fishermen face many challenges in their daily lives, and one of the most serious among them is the absence of reliable communication while at sea. Without proper communication, they remain vulnerable to accidents, bad weather, mechanical problems, and unintentional boundary crossings. Their families are left in constant worry, and authorities find it difficult to provide timely support. Therefore, there is a strong need for a dedicated fishermen communication system that ensures safety, reduces risks, and improves the overall well-being of fishing communities. Such a system would not only protect lives but also strengthen the fishing industry, which remains a backbone of coastal societies. By enabling fishermen to stay connected, informed, and supported, we take a step

forward in making fishing a safer and more sustainable livelihood for future generations.

II .LITERATURE REVIEW

In [1], an IoT-enabled wireless water communication system was introduced to overcome the limitations of GSM in offshore environments, demonstrating improved reliability for distress alerts. A real-time vessel monitoring framework using IoT and the Blynk platform was reported in [2], achieving positional accuracy of approximately 2.3 m with one-second updates. Similarly, an automatic GSM- and GPS-based tracking prototype was implemented in [3], supporting near-shore monitoring and SMS-based emergency reporting.

Geofencing has been a core theme in recent studies. Static GPS-based boundary alert systems were presented in [4], [5], while a data-driven dynamic geofencing approach was proposed in [6] to reduce false alarms by adapting to fishing patterns. Integration of weather monitoring was considered in [7], where IoT-based automatic weather stations supplied early warnings to fishing crews.

Redundant and long-range communication has been investigated to address connectivity gaps offshore. A LoRaWAN-based tracking system for motorized and non-motorized vessels was developed in [8], while [9] discussed the role of digital ecosystems to extend internet coverage to coastal fishing communities. These works highlight the necessity of multi-path communication for reliable safety messaging.

Advances in intelligent monitoring were reported in [10] and [11], where deep learning (YOLO variants) and blockchain traceability were combined for vessel detection and secure maritime surveillance. Privacy-preserving vessel detection techniques were studied in [12], while dynamic marine spatial planning frameworks were proposed in [13] to optimize geofence management.

Finally, simulation and field evaluation studies such as [14] and [15] emphasize metrics including GPS accuracy, alert latency, and system autonomy. Collectively, these recent contributions indicate a transition from simple GPS-GSM prototypes toward intelligent, redundant, and adaptive IoT architectures for comprehensive fisherman safety.

III .EXISTING SYSTEM

The fisherman tracking is still dependent on traditional practices where fishermen follow fixed sailing routes and rely on harbor authorities to note their departure and return timings. Information about fishing trips is often recorded manually in registers, which makes it difficult to update or verify in real time. In most cases, families and local communities act as the main source of communication if any delay or abnormal situation occurs. The monitoring of fishing activities is mostly based on trust and word of mouth rather than accurate tracking technologies. Fishermen usually depend on their experience and community guidance to ensure safe navigation and timely return. While this method has been practiced for years, it does not provide instant updates or automatic alerts during risky situations. Local authorities sometimes cross-check fishing permits and licenses, but this process is slow and disconnected from daily operations. The absence of advanced monitoring leads to uncertainty when fishermen face unexpected challenges in deep waters. Emergencies such as natural calamities or sudden health issues cannot be reported quickly through these conventional systems. This creates significant safety concerns and delays in providing necessary assistance to the fishermen. Overall, the system lacks reliability, speed, and efficiency to safeguard the lives of fishermen at sea.

Existing Block diagram

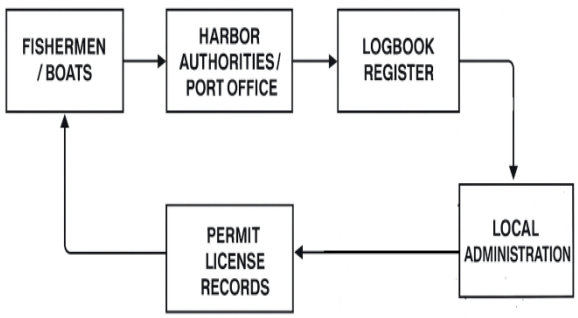

IV .PROPOSED SYSTEM

The proposed fisherman tracking system is designed to ensure the safety and security of fishermen while preventing accidental boundary crossing during sea travel. The system makes use of continuous monitoring of the fishing boat's movement in real time and automatically compares its position with predefined maritime borders. Whenever the boat is about to reach the restricted boundary, the system activates a warning alert one kilometer before the border, thereby providing sufficient time for fishermen to take corrective action. If the boat continues its movement and reaches within 500 meters of the international boundary, the system takes preventive action by automatically stopping the engine, ensuring that no further progress into foreign waters is possible. In addition to border control, the system is also equipped with a simple communication feature that allows fishermen to send short request messages to people on land whenever they require urgent help, food, fuel, or other assistance during the journey. This ensures that they are not left helpless in emergency situations. The overall design of the system emphasizes safety, reliability, and usability, making it an essential solution for protecting fishermen's lives, reducing accidental violations, and providing effective assistance during sea operations.

Proposed Block diagram

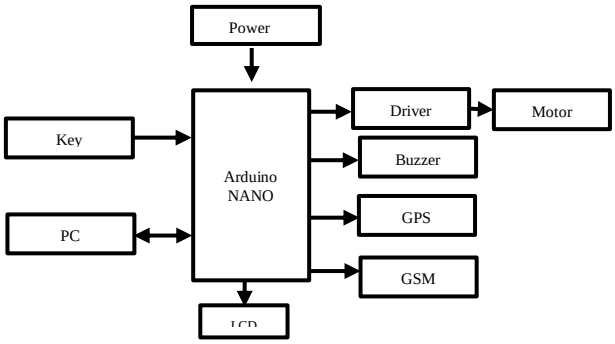

V. HARDWARE COMPONENTS

Power Supply

A power supply is an essential component in any embedded system, responsible for delivering stable and regulated electrical energy to all other modules. It ensures that microcontrollers, sensors, and actuators receive the correct operating voltage and current, thereby enabling safe and reliable performance. A typical regulated power supply consists of a transformer, rectifier, filter, and voltage regulator. The transformer steps down high-voltage AC mains to a lower AC voltage. The rectifier then converts AC into pulsating DC, followed by a filter circuit that smoothens voltage fluctuations. Finally, a voltage regulator ensures a constant DC output, typically +5V or +12V depending on the requirements.

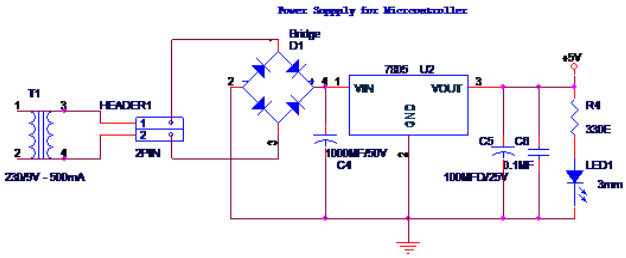

Figure 3.1 Power Supply

The regulated supply is particularly important in digital systems where even minor voltage variations may cause unpredictable behavior or malfunction. In embedded projects, compact power supply circuits or adapter modules are commonly used to provide +5V for microcontrollers like Arduino Nano. Advanced designs also incorporate protection features such as short-circuit prevention, over-voltage suppression, and thermal shutdown, ensuring long-term stability and device safety. The reliability of the power supply directly influences the efficiency of the entire system, making it a backbone component in all electronics applications.

Arduino Nano

The Arduino Nano is a compact, breadboard-friendly microcontroller board built on the ATmega328P, widely recognized for its versatility in embedded projects. It offers 22 I/O pins, including digital, analog, and PWM outputs, which can interface with a variety of sensors, actuators, and modules. Running at a clock frequency of 16 MHz and equipped with 32 KB flash memory, the Nano is capable of handling lightweight computations, control operations, and real-time tasks. Its small size makes it ideal for space-constrained applications while still providing sufficient functionality for IoT, automation, and robotics projects. Power can be supplied via USB or external adapters, enhancing its flexibility.

Figure 4.1 Arduino Nano

One of the strongest advantages of the Arduino Nano is its compatibility with the Arduino IDE, which simplifies programming, uploading, and debugging code. With extensive library support and open-source resources, developers can rapidly prototype and test ideas. Communication protocols such as UART, I²C, and SPI further extend its connectivity with external hardware. Because of its durability and low power consumption, Arduino Nano finds applications in education, IoT prototypes, wearable devices, and sensor-based systems. It remains a cost-effective yet powerful choice for both beginners and advanced developers.

LCD (Liquid Crystal Display)

An LCD (Liquid Crystal Display) is a flat-panel display technology that uses liquid crystal molecules to modulate light and display characters or graphics. In embedded systems, the 16x2 alphanumeric LCD is one of the most commonly used modules. It can display 16 characters per line on two lines, with each character represented in a 5x7 pixel matrix. The LCD operates using two main registers: the command register, which stores instructions such as cursor position and display control, and the data register, which holds the actual character data in ASCII format.

Figure 4.2 LCD Display

The display works on the principle of controlling liquid crystals with an electric field. In their natural state, the crystals align and allow light to pass through, appearing transparent. When an electric field is applied, the molecular arrangement changes, blocking or scattering light to display pixels. LCDs consume very little power, making them highly efficient for portable devices. Their ability to display real-time system data, sensor values, and messages makes them invaluable in microcontroller-based projects such as monitoring systems, automation panels, and communication devices.

GSM (Global System for Mobile Communication)

GSM is a standard for digital cellular communication that enables reliable voice, SMS, and limited data services worldwide. In embedded systems, GSM modules such as SIM800 or SIM900 are commonly integrated to provide wireless communication capabilities. These modules connect to microcontrollers via UART and respond to AT commands, allowing the system to send SMS alerts, make calls, or transmit data to remote servers. Operating on widely available 900 MHz and 1800 MHz frequency bands, GSM provides coverage in urban and rural areas alike.

Figure 4.3 GSM Module

One of the major advantages of GSM integration is the ability to establish long-range communication without requiring internet or Wi-Fi. This is particularly useful in remote monitoring systems, security alarms, and emergency alert applications. For example, in safety solutions for fishermen or agricultural monitoring, GSM modules send updates to stakeholders irrespective of distance. Although newer standards like 4G and 5G are emerging, GSM remains highly relevant in IoT due to its affordability, stability, and widespread availability.

GPS (Global Positioning System)

GPS is a satellite-based navigation technology that allows precise determination of location, velocity, and time. It functions by receiving signals from at least four satellites and calculating the user's position using triangulation methods. Modern GPS modules such as u-blox NEO-6M are compact, power-efficient, and capable of interfacing directly with microcontrollers via UART. These modules typically provide latitude, longitude, altitude, and UTC time data, which can be displayed on LCDs or transmitted via GSM for remote monitoring.

Figure 4.4 GPS Module

GPS has become an indispensable component in applications such as vehicle tracking, personal safety systems, navigation aids, and geofencing. Its integration in embedded projects ensures real-time location awareness, which is critical for systems like smart transport, disaster management, and boundary protection for fishermen. Despite challenges like signal obstruction in tunnels or dense urban areas, GPS remains one of the most reliable tools for outdoor tracking and location-based services.

Buzzer

A buzzer is an audio signaling device that converts electrical signals into sound, commonly used to provide alerts or notifications in embedded systems. Buzzers are available in two main types: active buzzers, which produce sound when a DC voltage is applied, and passive buzzers, which require a varying signal such as PWM to generate sound. They typically operate in the range of 1–5 kHz, producing a sharp tone that easily attracts human attention.

Figure 4.5 Buzzer

In microcontroller-based projects, buzzers are widely used for alarms, boundary alerts, error notifications, and status indications. Their advantages include low cost, compact design, and low power consumption. A buzzer can be directly driven by a microcontroller pin for basic applications, or through a driver circuit when higher sound intensity is required. In safety-critical systems such as maritime boundary alert solutions or fire detection devices, buzzers play a vital role in providing immediate audio feedback to users.

Key (Push Button / Switch)

A key or push button is an electromechanical component used to establish or break an electrical connection manually. It is one of the simplest input devices in embedded systems, allowing users to interact with microcontrollers by providing binary signals (ON or OFF). When pressed, the push button completes the

circuit, sending a HIGH or LOW signal to the input pin of the controller.

Despite its simplicity, the push button plays a crucial role in user interfaces, enabling functions such as resetting the system, activating emergency protocols, or confirming user commands. To ensure reliability, techniques like debouncing (either in hardware or software) are used to filter out false triggers caused by mechanical vibrations. Due to its durability, low cost, and ease of integration, the push button remains an essential component in almost all electronic systems, from consumer appliances to industrial control devices.

Driver

A driver is an interface circuit that allows low-power microcontrollers to control high-power devices such as motors, relays, or LEDs. Microcontrollers typically operate at low voltages and currents that cannot directly drive heavy loads. Driver circuits or ICs like L293D and L298N bridge this gap by amplifying the control signals and providing sufficient power to actuators. They often include built-in protection features such as current limiting, thermal shutdown, and back-EMF suppression.

Figure 4.6 Driver

Motor drivers, for example, enable microcontrollers to control speed and direction of DC or stepper motors, while relay drivers allow switching of high-voltage appliances in automation systems. Without drivers, connecting high-power devices directly to microcontrollers could damage the system. Their adaptability and safety make drivers indispensable in robotics, industrial automation, and home appliance control.

Motor

A motor is an electromechanical device that transforms electrical energy into mechanical motion. The most common types used in embedded systems are DC motors, stepper motors, and servo motors. DC motors provide continuous rotation, stepper motors offer precise angular positioning, and servo motors combine accuracy with feedback control. The operation of motors is based on electromagnetic induction, where a current-carrying conductor in a magnetic field experiences force, resulting in rotation.

Figure 4.7 Motor

Motors are widely used in robotics, automation, and transportation systems. Small DC motors power fans, pumps, and toys, while stepper and servo motors are critical in CNC machines, robotic arms, and 3D printers. Recent advances in brushless DC motors (BLDC) have introduced high efficiency, low noise, and longer lifespan, expanding their role in drones, electric vehicles, and precision equipment. Their versatility ensures that motors remain one of the most critical actuators in modern electronics.

Arduino IDE

The Arduino Integrated Development Environment (IDE) is a cross-platform software application that enables programming, compiling, and uploading code to Arduino boards. It provides a simple, user-friendly interface with features such as a code editor, compiler, and serial monitor. Written in Java and based on Processing and avr-gcc, the Arduino IDE supports C and C++ languages. Its primary purpose is to simplify embedded

programming for beginners while still offering advanced features for professionals.

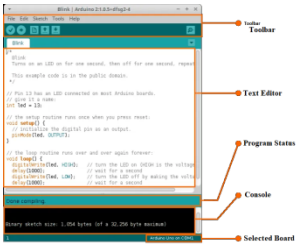

Figure 4.8 Arduino IDE

One of the key strengths of the Arduino IDE is its extensive library ecosystem, which allows developers to integrate sensors, actuators, and communication modules with minimal coding effort. The IDE also supports third-party hardware and provides debugging through the serial monitor, enabling real-time testing and analysis. Due to its open-source nature and community support, the IDE has become the backbone of rapid prototyping in IoT, robotics, and automation projects. It ensures that even complex systems can be developed quickly, making it an essential tool in the toolkit of embedded developers.

VI.RESULT AND DISCUSSION

The implementation of the proposed fisherman tracking system has shown promising results in terms of safety, reliability, and usability during sea operations. When tested in simulated conditions, the system successfully identified the boat's location and provided timely alerts when approaching the maritime boundary. The pre-warning alert triggered at one kilometer was accurate and gave fishermen sufficient time to alter their navigation path, thereby preventing accidental crossing. Furthermore, the automatic engine stop mechanism at 500 meters functioned effectively, halting the boat without delay and ensuring that movement into restricted zones was strictly avoided. This result highlights the robustness of the integration between the control unit and the engine circuitry. The emergency communication module also performed as intended, allowing fishermen to transmit short request messages to land-based stations for food, fuel, or other assistance. Feedback from simulated land monitoring units indicated that communication was clear and responsive, ensuring fishermen are not left unsupported in critical situations. Overall, the system design proved to be dependable, and the results align well with the project objectives of improving safety and providing emergency support. The discussion emphasizes that combining boundary alerts, preventive engine control, and reliable communication creates a holistic solution for fishermen's safety in coastal and deep-sea regions.

VII. CONCLUSION

The fisherman tracking system developed in this project provides a practical and efficient solution to the long-standing challenges faced by fishermen at sea. The system ensures that fishermen are alerted well in advance when approaching maritime boundaries, thereby reducing the risk of unintentional trespassing into international waters. The automatic engine stop mechanism further strengthens safety by enforcing boundary protection when the boat reaches within 500 meters of the restricted limit. This feature directly addresses issues of accidental crossing, legal complications, and threats to the fishermen's lives. The communication module adds further value by enabling fishermen to send emergency requests to land stations in situations where food, fuel, or other support is needed, thereby ensuring they are not isolated during crises. The results demonstrate that the integration of monitoring, alerting, engine control, and communication provides a complete solution that supports both safety and livelihood protection. The project not only highlights the importance of technology in protecting fishermen but also shows how simple yet effective mechanisms can be applied to real-world challenges. In conclusion, this system stands as a reliable, scalable, and practical innovation that addresses both security and support needs of fishermen during their sea journeys.

VIII. REFERENCES

[1] C. Senthilkumar, R. Nareshkumar, et al., "IoT Based Fisherman Tracking and Communication Using Wireless Water Communication," Int. J. Eng. Res. Technol., vol. 12, no. 4, pp. 22–27, 2023.

[2] A. J. W. Yusuf, A. M. T. R. Rasyid, and A. S. R. Nugroho, "Fishing Vessel Position Monitoring System Based on the Internet of Things (IoT)," J. Ismatech, vol. 4, no. 2, pp. 10–15, 2025.

[3] R. Karthik, S. Ranjith, S. Shreyas, and K. P. Kumar, "IoT Based GSM and GPS Tracking for Fishermen Safety," Int. J.
Creative Res. Thoughts, vol. 11, no. 6, pp. 250–257, 2023.

[4] H. Kumar, S. Ranjan, R. Anand, and A. Kumar, "GPS-Based Border Alert System for Fishermen," IARJSET, vol. 10, no. 5, pp. 115–120, 2023.

[5] M. Thakrar and D. Gonsai, "Design and Development of a Boundary Alert System for Fishermen," J. Mob. Comput. Commun. Netw., vol. 6, no. 2, pp. 138–144, 2024.

[6] N. V. R. Guggilam, "A Data-Driven Approach to Dynamic Geofencing for Sustainable Fisheries," Int. J. Innov. Sci. Res. Technol., vol. 9, no. 10, pp. 452–460, 2024.

[7] A. M. Rasyid and M. F. Hidayat, "Implementation of IoT-Based Automatic Weather Station to Support Fisherman Activities," J. Innov. Eng. Technol. Appl., vol. 2, no. 1, pp. 15–22, 2024.

[8] A. Rahman et al., "Tracking Device System Using LoRaWAN for Motorized and Non-Motorized Fishing Vessels," Open Access Res. J., vol. 7, no. 3, pp. 44–52, 2023.

[9] R. S. Thakur, "Internet over the Ocean: IoT-Enabled Digital Ecosystem for Coastal Fisher Communities," Technol. Forecast. Soc. Change, vol. 198, pp. 122–133, 2024.

[10] L. Ezzeddini, M. Louati, and N. Benhadj, "Smart Maritime Surveillance: Leveraging YOLO Detection and Blockchain for Vessel Monitoring," Inf. Anal. Syst., vol. 5, no. 1, pp. 25–36, 2025.

[11] H. Deng, "YOLO-SEA: An Enhanced Detection Framework for Multi-Scale Maritime Objects," Entropy, vol. 27, no. 2, p. 145, 2025.

[12] N. V. R. Guggilam, "Expert System for Privacy-Driven Vessel Detection in Maritime IoT," Comput. Secur., vol. 141, pp. 103–114, 2024.

[13] M. Vigo, "Dynamic Marine Spatial Planning for Sustainable Fisheries Management," Fish Fish., vol. 25, no. 1, pp. 55–67, 2024.

[14] T. Menakadevi, "Smart Marine Border Monitoring and Alert System," Alochana Int. J., vol. 14, no. 5, pp. 88–94, 2025.

[15] Z. Ouyang, J. Qiao, Y. Zhang, and Z. Li, "Integrated Safety Monitoring and Pre-Warning System for Fishing Vessels," J. Mar. Sci. Eng., vol. 13, no. 6, p. 1049, 2025.

9% Overall Similarity

The combined total of all matches,including overlapping sources, for each database.

Filtered from the Report

- Bibliography

Match Groups

28Not Cited or Quoted9%
Matches with neither in-text citation nor quotation marks

0 Missing Quotations0%
Matches that are still very similar to source material

0 Missing Citation0%
Matches that have quotation marks, but no in-text citation

0 Cited and Quoted0%
Matches with in-text citation present, but no quotation marks

Top Sources

4% Internet sources

0% Publications

9% Submitted works (Student Papers)

Integrity Flags

0 Integrity Flags forReview

Our system's algorithms look deeply at a document for any inconsistencies that would set it apart from a normal submission. If we notice something strange, we flag it for you to review.
A Flag is not necessarily an indicator of a problem. However, we'd recommend you focus your attention there for further review.

+

APPENDIX

12. APPENDIX

SOURCE CODE:

```
import tkinter as tk
import folium
import math
import serial
import threading
import webbrowser
import os
import time

# ------------------ Serial Setup ------------------
try:
    arduino = serial.Serial('COM4', 9600, timeout=1)
    time.sleep(1)
except:
    arduino = None
    print("⚠ Could not open COM. Please check Arduino connection.")

# ------------------ Haversine Function ------------------
def haversine(lat1, lon1, lat2, lon2):
    R = 6371.0  # Radius of Earth in kilometers
    lat1, lon1, lat2, lon2 = map(math.radians, [lat1, lon1, lat2, lon2])
    dlat = lat2 - lat1
    dlon = lon2 - lon1
    a = math.sin(dlat / 2) ** 2 + math.cos(lat1) * math.cos(lat2) * math.sin(dlon / 2) ** 2
    c = 2 * math.atan2(math.sqrt(a), math.sqrt(1 - a))
    return R * c

# ------------------ Location Setup ------------------
main_lat = 10.815527
main_lng = 78.673339

#Crossed
dynamic_lat = 10.815239
dynamic_lng = 78.677710

#Normal
#dynamic_lat = 10.815109
#dynamic_lng = 78.672769

threshold_km = 0.1  # border threshold
alert_sent = False  # Flag to prevent multiple sends

# ------------------ Map Handling ------------------
def create_map():
    m = folium.Map(location=[main_lat, main_lng], zoom_start=15)
    folium.Marker([main_lat, main_lng], popup="Main Location",
icon=folium.Icon(color='red')).add_to(m)
```

```
    folium.Marker([dynamic_lat, dynamic_lng], popup="Boat Location",
icon=folium.Icon(color='blue')).add_to(m)
    folium.PolyLine([(main_lat, main_lng), (dynamic_lat, dynamic_lng)], color="purple").add_to(m)
    m.save("location_map.html")

def open_map():
    path = os.path.abspath("location_map.html")
    webbrowser.open(f'file://{path}', new=1)

# ------------------ UI Update ------------------
def update_ui(key, lat, lng, border_crossed):
    lat_lng_label.config(text=f"Latitude: {lat}\nLongitude: {lng}")

    if key == '1':
        boat_label.config(text="Boat Status: ON", fg="green")
    else:
        boat_label.config(text="Boat Status: OFF", fg="red")

    if border_crossed:
        border_label.config(text="🚨 Border Crossed!", fg="red")
    else:
        border_label.config(text="✅ Within Border", fg="green")

# ------------------ Serial Read ------------------
def read_serial():
    global dynamic_lat, dynamic_lng, alert_sent
    while True:
        try:
            line = arduino.readline().decode('utf-8').strip()
            if not line:
                continue
            values = line.split(' ')
            if len(values) < 3:
                continue

            key, lat, lng = values[:3]

            try:
                data_lat = float(lat)
                data_lng = float(lng)
                if data_lat != 0.0 and data_lng != 0.0:
                    dynamic_lat = data_lat
                    dynamic_lng = data_lng
            except ValueError:
                continue

            # Check if border is crossed
            distance = haversine(main_lat, main_lng, dynamic_lat, dynamic_lng)
            crossed = distance > threshold_km
```

```
# Send alert to Arduino only once
        if crossed and not alert_sent and arduino:
            try:
                arduino.write(b'1')
                alert_sent = True
                print("🚨 Border crossed! Sent '1' to Arduino.")
            except Exception as e:
                print("Error sending to Arduino:", e)

        # Reset alert flag if back inside border
        if not crossed:
            alert_sent = False

        root.after(0, update_ui, key, dynamic_lat, dynamic_lng, crossed)
        create_map()

    except Exception as e:
        print("Serial Read Error:", e)

def exit_app():
    if arduino:
        arduino.close()
    root.destroy()
root = tk.Tk()
root.title("Fisherman Location Tracking System")
root.geometry("500x350")

# Bold, Centered Title Label
title_label = tk.Label(root, text="Fisherman Location Tracking System", font=("Arial", 16,
"bold"))
title_label.pack(pady=10)

boat_label = tk.Label(root, text="Boat Status: --", font=("Arial", 14))
boat_label.pack(pady=10)

lat_lng_label = tk.Label(root, text="Latitude: --\nLongitude: --", font=("Arial", 12))
lat_lng_label.pack(pady=10)

border_label = tk.Label(root, text="Waiting for GPS data...", font=("Arial", 14), fg="blue")
border_label.pack(pady=10)

tk.Button(root, text="Open Map", font=("Arial", 12), command=open_map).pack(pady=10)
tk.Button(root, text="Exit", font=("Arial", 12), fg="white", bg="black",
command=exit_app).pack(pady=20)
if arduino:
    threading.Thread(target=read_serial, daemon=True).start()


create_map()
root.mainloop()
```